SERVICE MANUAL

MODEL	COMMANDER	DEST.	CHASSIS NO.
PGM-2950	RM-854	US/CND	SCC-F37C-A
PGM-2950E	RM-854	AEP	SCC-H41A-A

V11816

Note :

1. Adjustment Manual for this model is separately published.

	Adjustment manual
Part No	9-978-474-01

※ A adjustment manual has been issued separately.

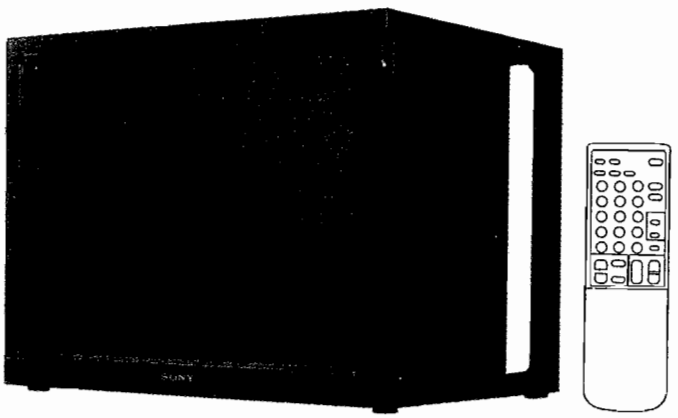

MICROFILM

TRINITRON® COLOR GRAPHIC MONITOR

SONY®

※ Please file according to model size.···

29

SPECIFICATIONS

Video signal

Picture tube	29" Super Trinitron tube Visible picture size: 675 mm (27" measured diagonally) AG pitch: 0.70 – 0.85 mm Anti-glare & Anti-static
Frequency response	16 MHz (–3 dB)
Scanning frequency	fH 31.5 kH, fV 60/70 Hz

Picture performance

Color temperature	9300K (standard)/6500K switchable
Line pull range	Horizontal: ±500 Hz Vertical: –8 Hz
Zooming	Within 5%

Inputs and Outputs

R, G, B IN	BNC connector 0.7 Vp-p/non-composite 75-ohm (auto), loop through 1 Vp-p/composite 75-ohm (auto), loop through
Sync input	BNC connector H (or composite) SYNC, V SYNC, 1 – 5 Vp-p, loop through
AUDIO IN (L, R)	Phono jack –5 dBs high impedance, loop through
Speaker output	8 – 16 ohm, 7 W + 7 W

General

Power requirements	PGM-2950: 120 V AC, 50/60 Hz, Max. 3.7 A PGM-2950E: 220 – 240 V AC, 50/60 Hz, Max. 1.2 A
Operating temperature range	0 – 35°C (32 – 95°F)
Dimensions	687 × 538 × 529 mm (w/h/d) (27 ⅛ × 21 ¼ × 20 ⅞ inches)
Mass	53 kg (114 lb 10 oz)
Supplied accessories	AC power cord (1) AC plug holder (1) Remote commander RM-854 with a battery (1) Ferrite core (2)
Optional accessory	Speaker system SS-X6A

Design and specifications are subject to change without notice.

(CAUTION)

SHORT CIRCUIT THE ANODE OF THE PICTURE TUBE AND THE ANODE CAP TO THE METAL CHASSIS, CRT SHIELD, OR CARBON PAINTED ON THE CRT, AFTER REMOVING THE ANODE.

(ATTENTION)

APRES AVOIR DECONNECTE LE CAP DE L'ANODE, COURT-CIRCUITER L'ANODE DU TUBE CATHODIQUE ET CELUI DE L'ANODE DU CAP AU CHASSIS METALLIQUE DE L'APPAREIL, OU AU COUCHE DE CARBONE PEINTE SUR LE TUBE CATHODIQUE OU AU BLINDAGE DU TUBE CATHODIQUE.

WARNING!!

AN ISOLATION TRANSFORMER SHOULD BE USED DURING ANY SERVICE TO AVOID POSSIBLE SHOCK HAZARD, BECAUSE OF LIVE CHASSIS.
THE CHASSIS OF THIS RECEIVER IS DIRECTLY CONNECTED TO THE AC POWER LINE.

ATTENTION!!

AFIN D'EVITER TOUT RISQUE D'ELECTROCUTION PROVENANT D'UN CHÁSSIS SOUS TENSION, UN TRANSFORMATEUR D'ISOLEMENT DOIT ETRE UTILISÉ LORS DE TOUT DÉPANNAGE. LE CHÁSSIS DE CE RÉCEPTEUR EST DIRECTEMENT RACCORDÉ À L'ALIMENTATION SECTEUR.

SAFETY-RELATED COMPONENT WARNING!!

COMPONENTS IDENTIFIED BY SHADING AND MARK ⚠ ON THE SCHEMATIC DIAGRAMS, EXPLODED VIEWS AND IN THE PARTS LIST ARE CRITICAL FOR SAFE OPERATION. REPLACE THESE COMPONENTS WITH SONY PARTS WHOSE PART NUMBERS APPEAR AS SHOWN IN THIS MANUAL OR IN SUPPLEMENTS PUBLISHED BY SONY. CIRCUIT ADJUSTMENTS THAT ARE CRITICAL FOR SAFE OPERATION ARE IDENTIFIED IN THIS MANUAL. FOLLOW THESE PROCEDURES WHENEVER CRITICAL COMPONENTS ARE REPLACED OR IMPROPER OPERATION IS SUSPECTED.

ATTENTION AUX COMPOSANTS RELATIFS À LA SÉCURITÉ!!

LES COMPOSANTS IDENTIFIÈS PAR UNE TRAME ET PAR UNE MARQUE ⚠ SUR LES SCHÉMAS DE PRINCIPE, LES VUES EXPLOSÉES ET LES LISTES DE PIECES SONT D'UNE IMPORTANCE CRITIQUE POUR LA SÉCURITÉ DU FONCTIONNEMENT. NE LES REMPLACER QUE PAR DES COMPOSANTS SONY DONT LE NUMÉRO DE PIÉCE EST INDIQUÉ DANS LE PRÉSENT MANUEL OU DANS DES SUPPLÉMENTS PUBLIÉS PAR SONY. LES RÉGLAGES DE CIRCUIT DONT L'IMPORTANCE EST CRITIQUE POUR LA SÉCURITÉ DU FONCTIONNEMENT SONT IDENTIFIES DANS LE PRÉSENT MANUEL. SUIVRE CES PROCÉDURES LORS DE CHAQUE REMPLACEMENT DE COMPOSANTS CRITIQUES, OU LORSQU'UN MAUVAIS FONCTIONNEMENT EST SUSPECTÉ.

SAFETY CHECK-OUT

(US model only)

After correcting the original service problem, perform the following safety checks before releasing the set to the customer :

1. Check the area of your repair for unsoldered or poorly-soldered connections. Check the entire board surface for solder splashes and bridges.
2. Check the interboard wiring to ensure that no wires are "pinched" or contact high-wattage resistors.
3. Check that all control knobs, shields, covers, ground straps, and mounting hardware have been replaced. Be absolutely certain that you have replaced all the insulators.
4. Look for unauthorized replacement parts, particularly transistors, that were installed during a previous repair. Point them out to the customer and recommend their replacement.
5. Look for parts which, though functioning, show obvious signs of deterioration. Point them out to the customer and recommend their replacement.
6. Check the line cord for cracks and abrasion. Recommend the replacement of any such line cord to the customer.
7. Check the condition of the monopole antenna (if any). Make sure the end is not broken off, and has the plastic cap on it. Point out the danger of impalement on a broken antenna to the customer, and recommend the antenna's replacement.
8. Check the B+ and HV to see they are at the values specified. Make sure your instruments are accurate;be suspicious of your HV meter if sets always have low HV.
9. Check the antenna terminals, metal trim, "metallized" knobs, screws, and all other exposed metal parts for AC leakage. Check leakage as described below.

LEAKAGE TEST

The AC leakage from any exposed metal part to earth ground and from all exposed metal parts to any exposed metal part having a return to chassis, must not exceed 0.5mA (500 microampers). Leakage current can be measured by any one of three methods.

1. A commercial leakage tester, such as the Simpson 229 or RCA WT-540A. Follow the manufacturers' instructions to use these instruments.
2. A battery-operated AC milliammeter. The Data Precision 245 digital multimeter is suitable for this job.
3. Measuring the voltage drop across a resistor by means of a VOM or battery-operated AC voltmeter. The "limit" indication is 0.75V, so analog meters must have an accurate low-voltage scale. The Simpson 250 and Sanwa SH-63Trd are examples of a passive VOM that is suitable. Nearly all battery operated digital multimeters that have a 2V AC range are suitable. (See Fig. A)

HOW TO FIND A GOOD EARTH GROUND

A cold-water pipe is guaranteed earth ground;the cover-plate retaining screw on most AC outlet boxes is also at earth ground. If the retaining screw is to be used as your earth-ground, verify that it is at ground by measuring the resistance between it and a cold-water pipe with an ohmmeter. The reading should be zero ohms. If a cold-water pipe is not accessible, connect a 60-100 watts trouble light (not a neon lamp) between the hot side of the receptacle and the retaining screw. Try both slots, if necessary, to locate the hot side of the line, the lamp should light at normal brilliance if the screw is at ground potential. (See Fig. B)

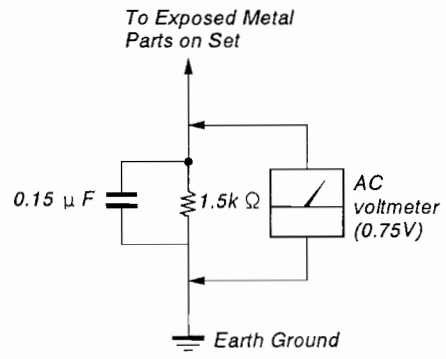

Fig. A. Using an AC voltmeter to check AC leakage.

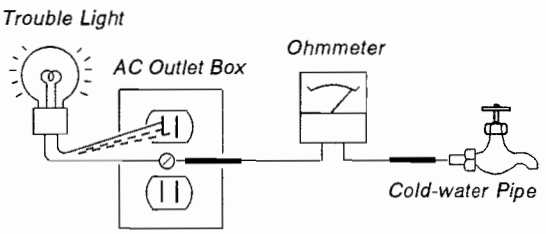

Fig B. Checking for earth ground.

TABLE OF CONTENTS

Section	Title	Page
1.	**GENERAL**	
	Features	5
	Location and Function of Parts and Controls	5
	Power Sources	7
	Using On-screen Menus	7
	Operating a Specific Monitor with the Remote Commander	8
2.	**DISASSEMBLY**	
2-1.	Rear Cover Removal	9
2-2.	Chassis Assy Removal	9
2-3.	Service Position	9
2-4.	UA Board Removal	9
2-5.	B Board Removal	10
2-6.	HVR Block Removal	10
2-7.	UJ Board Removal	10
2-8.	G1 Board Removal	10
2-9.	G Board Removal	11
2-10.	UT Board Removal	11
2-11.	VC and D Boards Removal	11
2-12.	A Board Removal	11
2-13.	Extension Cable (1)	12
2-14.	Extension Cable (2)	12
2-15.	Extension Board	12
2-16.	Key Board Unit and Blind Panel Removal	12
2-17.	Degaussing Coil Removal	13
2-18.	Picture Tube Removal	13
2-19.	Harness Location	13
3.	**SAFETY RELATED ADJUSTMENT**	15
4.	**DIAGRAMS**	
4-1.	Block Diagrams (1)	17
	Block Diagrams (2)	21
	Block Diagrams (3)	24
4-2.	Frame Schematic Diagram	27
4-3.	Circuit Boards Location	30
4-4.	Printed Wiring Boards and Schematic Diagrams	30
	• A (1/2) Board	34
	• A (2/2) Board	37
	• G1 Board	42
	• V Board	42
	• H3 Board	43
	• VC Board	45
	• G Board	53
	• B (1/2) Board	60
	• B (2/2) Board	63
	• DS Board	68
	• M Board	70
	• D Board	77
	• H2 Board	80
	• UT Board	82
	• DA Board	84
	• UA Board	87
	• DX (1/2) Board	94
	• DX (2/2) Board	97
	• UJ Board	103
	• C Board	104
4-5.	IC Block Diagrams	109
4-6.	Semiconductors	113
5.	**EXPLODED VIEWS**	
5-1.	Rear Cover	115
5-2.	Picture Tube	116
5-3.	Chassis	117
6.	**ELECTRICAL PARTS LIST**	118

SECTION 1
GENERAL

The operating instructions mentioned here are partial abstracts from the Operating Instruction Manual. The page numbers of the Operating Instruction Manual remein as in the manual.

Features

Trinitron picture tube
The Trinitron picture tube provides a flat and high resolution picture.

Receivable video modes

No.	Resolution (dots × lines)	Horizontal Frequency	Vertical Frequency	Graphics Mode
1	640 × 480	31.5 kHz	60.0 Hz	VGA (Graphic)
2	640 × 350	31.5 kHz	70.0 Hz	VGA (EGA Emu)
3	720 × 400	31.5 kHz	70.0 Hz	VGA (Text)

ID control
You can operate a specific monitor among several monitors by using the index number features.

On-screen menus
You can adjust the settings by using the on-screen menus.

Control S
The CONTROL S signal allows remote control of several monitors and a VCR through a single monitor.

Location and function of parts and controls

Front panel

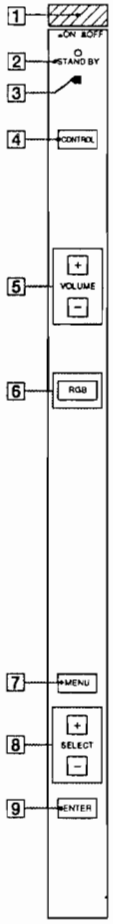

1 POWER switch
Press to turn the monitor on. Press again to turn it off.

2 STAND BY indicator
Lights up when the monitor is turned off with the remote commander.

3 Remote sensor
Receives the beam from the remote commander.

4 CONTROL key
To operate the keys on the front panel, first press this key. Then the keys light up that shows they can be operated. Press again to deactivate them.

5 VOLUME +/– keys
Press to obtain the desired volume.

6 RGB indicator
Lights up when the monitor is turned on.

7 MENU key
Press to make the menu appear or to go to the following menu.

8 SELECT +/– keys
Press to move the cursor (▶) to an item or to adjust value in a menu.

9 ENTER key
Press to select the desired item in a menu.

Note

If the picture disappears suddenly and the STAND BY indicator flashes, there may be a failure in the monitor. Unplug the unit and call your authorized Sony dealer.

Rear panel

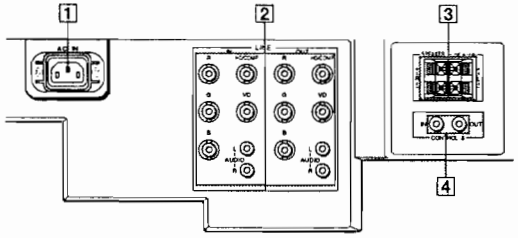

1 AC IN socket
Connect the supplied AC power cord to this socket and to a wall outlet.

2 LINE connectors

R IN, G IN, B IN (BNC)
Connect to the RGB signal outputs of a computer. This monitor syncs with VGA signals of an IBM or compatible system equipped with a VGA.
R OUT, G OUT, B OUT (BNC)
Loop-through outputs of the RGB IN connectors. Connect to the RGB signal inputs of other monitors.
HD/COMP IN (BNC)
Connect to the H sync signal or composite sync signal output of a computer.
VD IN (BNC)
Connect to the V sync signal output of a computer.
HD/COMP OUT(BNC)
Loop-through output of the HD/COMP IN connector. Connect to the H sync signal or composite sync signal input.
VD OUT (BNC)
Loop-through output of the VD IN connector. Connect to the V sync signal input.

Note

External sync signal is selected automatically. See the priority chart below.

Input connector	Input sync signals		
HD/COMP	H Sync	Comp Sync	—
VD	V Sync	—	—
G	Sync on G	Sync on G	Sync on G
Sync signals to be selected	H Sync V Sync	Comp Sync	Sync on G

AUDIO IN (phono)
Connect to the audio output of a computer. Connect to the channel L when the audio signal is monaural.
AUDIO OUT (phono)
Loop-through output of the AUDIO IN connector. Connect to the audio inputs of another monitor.

3 SPEAKER L/R terminals
Connect to speakers with 8 to 16 ohms impedance.

Note

Do not connect the speaker's cord to the monitor and to an amplifier simultaneously, or an excessive electric current might flow from the amplifier and damage the monitor.

4 CONTROL S IN/OUT connectors
Connect to the CONTROL S connectors of a VCR or several monitors. Then you can control the system with a single remote commander.
To control the system by aiming the supplied remote commander to the remote sensor of the monitor, connect CONTROL S OUT of the monitor and CONTROL S IN of other equipment.

Note

If you connect CONTROL S IN to the other equipment's CONTROL S OUT connector, you cannot operate the monitor with the supplied remote commander.

Location and function of parts and controls (continued)

Remote commander

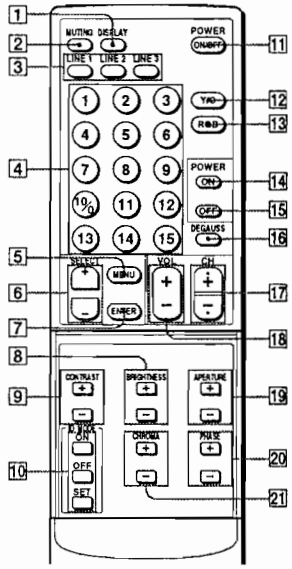

Installing battery

Insert a size AA (R6) battery in correct polarity.

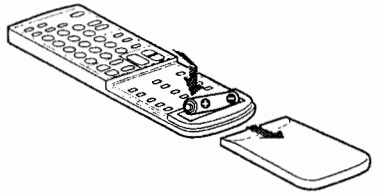

Notes

- In normal operation, a battery will last up to half a year. If the remote commander does not operate properly, the battery might be exhausted. Replace it with new one.
- To avoid damage from possible battery leakage, remove the battery if you do not plan to use the remote commander for a fairly long time.

1 DISPLAY button
(You do not use this button with the monitor.)

2 MUTING button
Press to mute the sound. Press this button again or press the VOL (volume) + button to obtain the sound again.

3 LINE 1/LINE 2/LINE 3 buttons
(You do not use these buttons with the monitor.)

4 Number buttons
Press to select the index number. (You do not use the ⑪ to ⑬ buttons with the monitor.)

5 MENU button
Press to make the menu appear or to go to the following menu.

6 SELECT +/– buttons
Press to move the cursor (▶) to an item or to adjust value in a menu.

7 ENTER button
Press to select the desired item in a menu.

8 BRIGHTNESS +/– buttons
Press the + button to make the picture brighter or the – button to make it darker.

9 CONTRAST +/– buttons
Press the + button to increase the contrast or the – button to decrease it.

10 ID MODE buttons
Press ON to make an index number appear on the screen. Then press the index number of the monitor you want to operate and press SET. After you finish the operation, press OFF to return to the normal mode.

11 POWER ON/OFF switch
Press to turn on the monitor. Press again to turn it off.

12 Y/C button
(You do not use this button with the monitor.)

13 RGB button
(You do not use this button with the monitor.)

14 POWER ON switch
Press to turn on the monitor. Use this switch instead of the POWER ON/OFF switch when you do not want to let another monitor be affected.

15 POWER OFF switch
Press to turn off the monitor. Use this switch instead of the POWER ON/OFF switch when you do not want to let another monitor be affected.

16 DEGAUSS button
Press to demagnetize the screen. Wait for 10 minutes or more before activating this feature again. The same interval is needed after turning on the monitor.

17 CH +/– buttons
(You do not use these buttons with the monitor.)

18 VOL +/– buttons
Press to obtain the desired volume.

19 APERTURE +/– buttons
(You do not use these buttons with the monitor.)

20 PHASE +/– buttons
(You do not use these buttons with the monitor.)

21 CHROMA +/– buttons
(You do not use these buttons with the monitor.)

Power sources

Connect the AC power cord (supplied) to the AC IN socket and to a wall outlet.

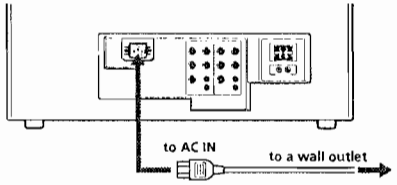

To connect an AC power cord securely with an AC plug holder

1 Plug the power cord into the AC IN socket. Then, attach the AC plug holder (supplied) to the AC power cord.

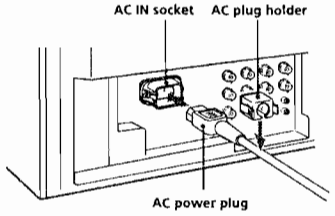

2 Slide the AC plug holder over the cord until it connects to the attached holder.

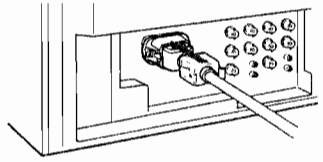

To remove the AC power cord

Squeeze the left and right sides and pull out the AC plug holder.

Using on-screen menus

Operating through menus

There are four buttons (keys) on the monitor and the remote commander for menu operations.
To display a menu, first press MENU. Press + or – to move the cursor (▶) and press ENTER to select an item.
To return to the normal screen, press MENU.

Menu operating keys

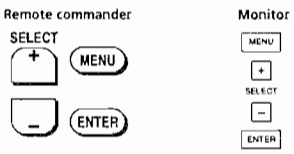

Each time you press MENU, the screen changes as shown below. For details see the following guide.

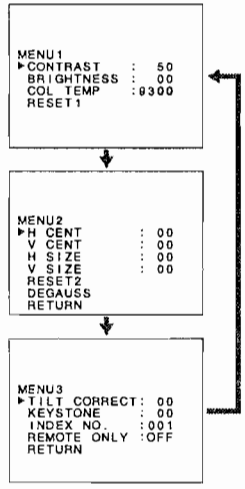

Menu guide

Menu 1

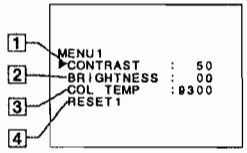

1 CONTRAST
Press + to increase the contrast and press – to decrease it.

2 BRIGHTNESS
Press + to make the picture brighter and press – to make it darker.

3 COL TEMP
Select the color temperature from among 9300K and 6500K.

4 RESET1
Select to restore the factory settings in MENU 1.

Menu 2

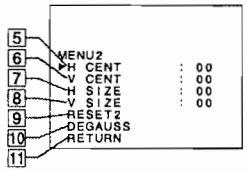

5 H CENT
Adjusts the horizontal centering. Press + to move the picture to the right and press – to move it to the left.

6 V CENT
Adjusts the vertical centering. Press + to move the picture up and press – to move it down.

7 H SIZE
Adjusts the horizontal picture size. Press + to enlarge the horizontal size and press – to diminish it.

8 V SIZE
Adjusts the vertical picture size. Press + to enlarge the vertical size and press – to diminish it.

9 RESET2
Select to restore the factory settings in MENU 2.

10 DEGAUSS
Select to demagnetize the screen. Wait for 10 minutes or more before activating this feature again. The same interval is needed after turning on the monitor.

11 RETURN
Select to return to the MENU 1 screen.

Menu 3

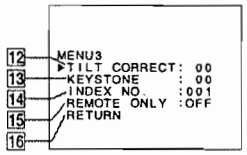

12 TILT CORRECT
Adjusts the picture tilt due to the influence of the earth's magnetism. Press + to rotate the picture clockwise and press – to rotate it counterclockwise.

13 KEYSTONE
Adjusts the vertical trapezoid distortion due to the influence of the earth's magnetism. Press + to expand the upper part and press – to expand the lower part.

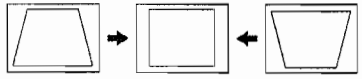

14 INDEX NO.
Sets the index number of the monitor. You cannot set the number with the remote commander. Use the keys on the monitor. For more information about the index number, see "Operating a specific monitor with the remote commander" on page 10.

15 REMOTE ONLY
Select ON to operate the monitor with the supplied remote commander only. You can then only turn on or off the power on the monitor. While REMOTE ONLY is ON, the indicators on the front panel go off.
To operate the monitor with the monitor itself, turn on the power again. You cannot release the REMOTE ONLY mode by disconnecting the AC power cord.

16 RETURN
Select to return to the MENU 2 screen.

Operating a specific monitor with the remote commander

Using the supplied remote commander, you can operate a specific monitor without affecting other monitors that are installed together.

1 Press ID MODE ON on the remote commander.
Monitor index numbers appear in white characters on all the monitors. (Every monitor is allocated an individual preset index number from 1 to 255. See "To change the index number" in the column to the right on this page to change the index number.)

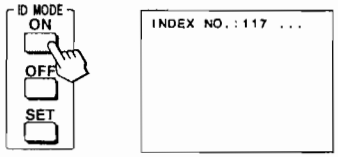

2 Input the index number of the monitor you want to operate using 0 – 9 buttons of the remote commander.
The input number appears right next to each monitor's own index number.

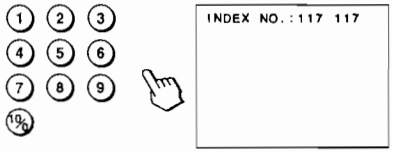

3 Press ID MODE SET.
The character on the selected monitor changes to cyan while others change to red.

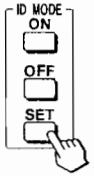

Now you can operate only a specified monitor. (All operations available in ID mode except POWER ON/OFF.)

4 After necessary adjustment, press ID MODE OFF.
The monitor returns to the normal mode.

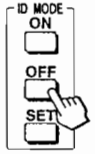

To change the index number

You can change the index number if necessary.
You cannot change the number with the remote commander. Use the keys on the monitor.

1 Display MENU 3 screen with pressing the MENU key.

2 Select INDEX NO. with the SELECT +/– keys and press the ENTER key.

3 Select the index number with the SELECT +/– keys and press the ENTER key.

SECTION 2
DISASSEMBLY

2-1. REAR COVER REMOVAL

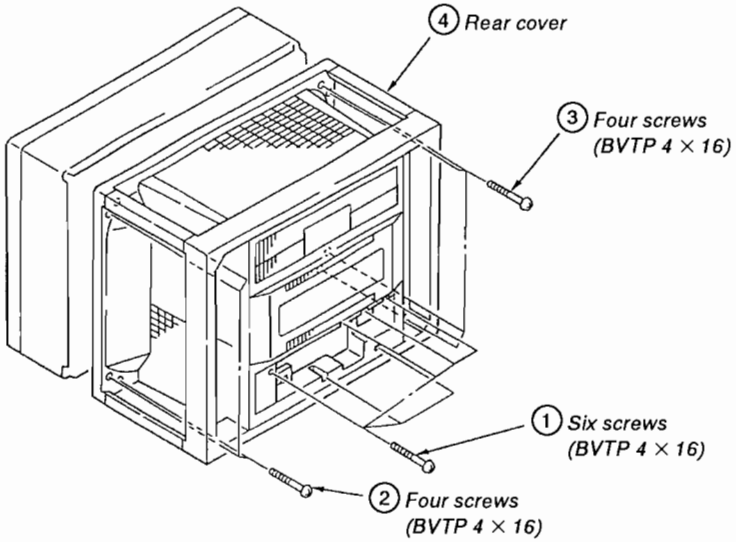

2-2. CHASSIS ASSY REMOVAL

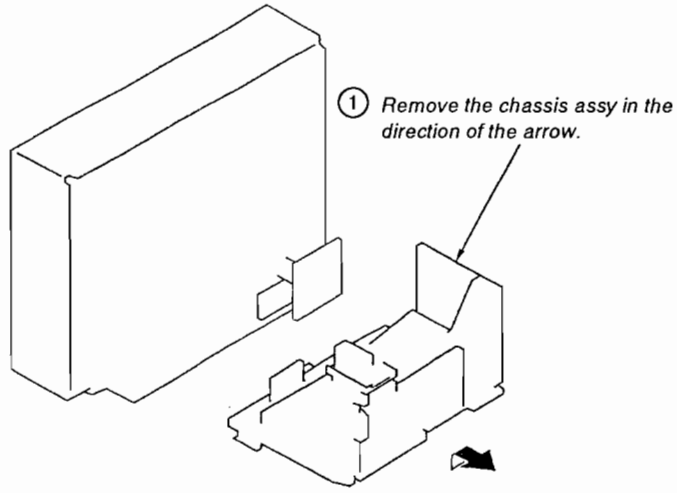

2-3. SERVICE POSITION

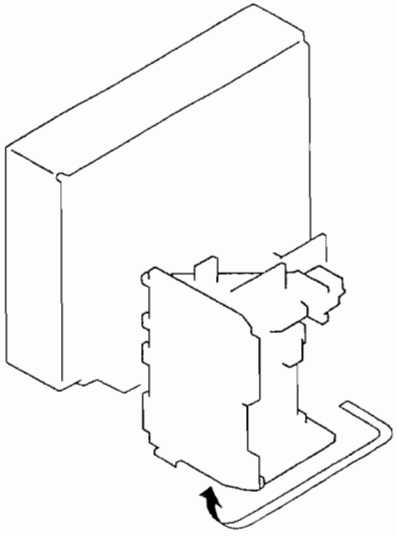

2-4. UA BOARD REMOVAL

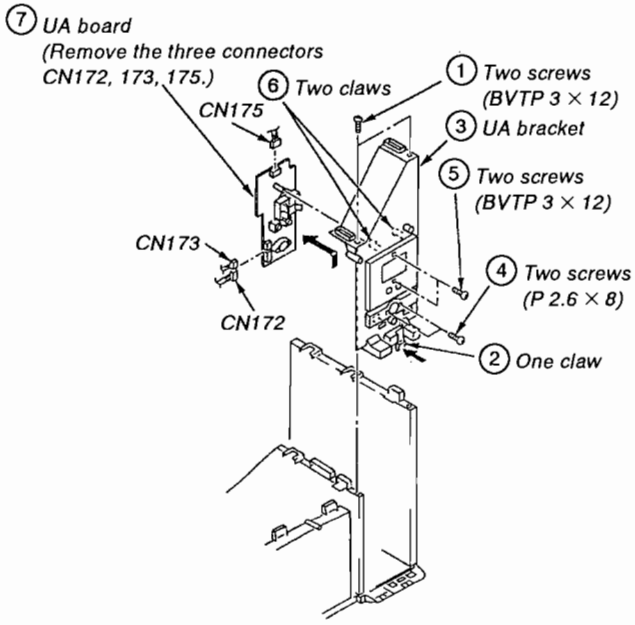

2-5. B BOARD REMOVAL

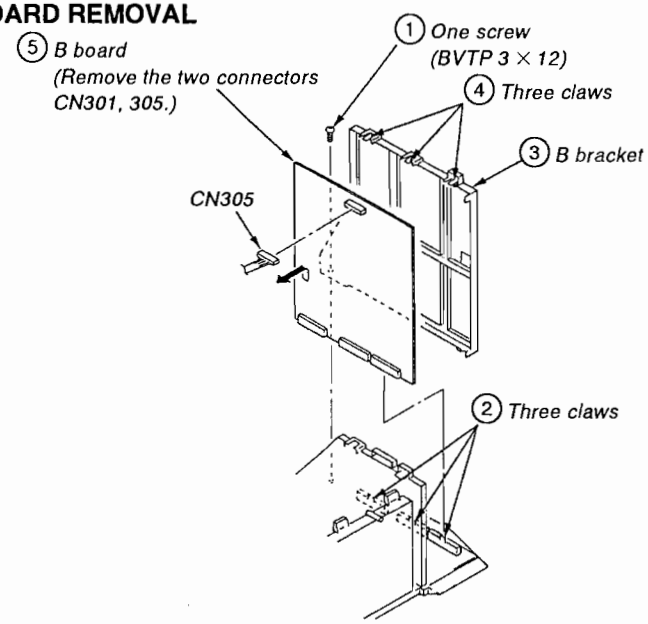

2-6. HVR BLOCK REMOVAL

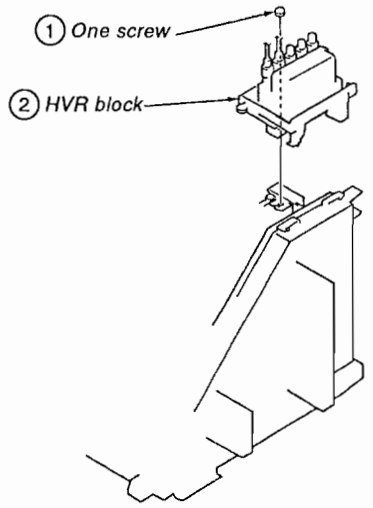

2-7. UJ BOARD REMOVAL

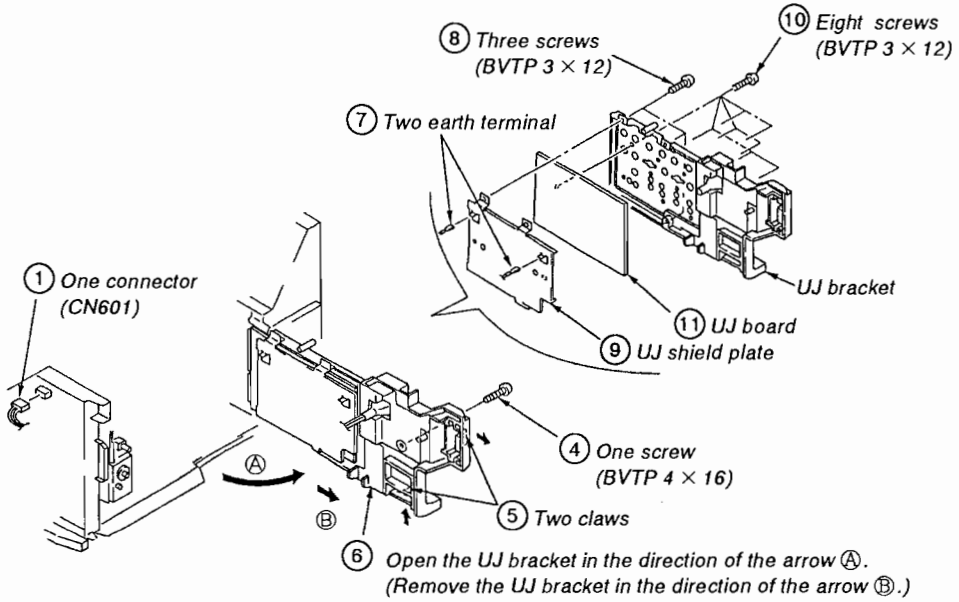

2-8. G1 BOARD REMOVAL

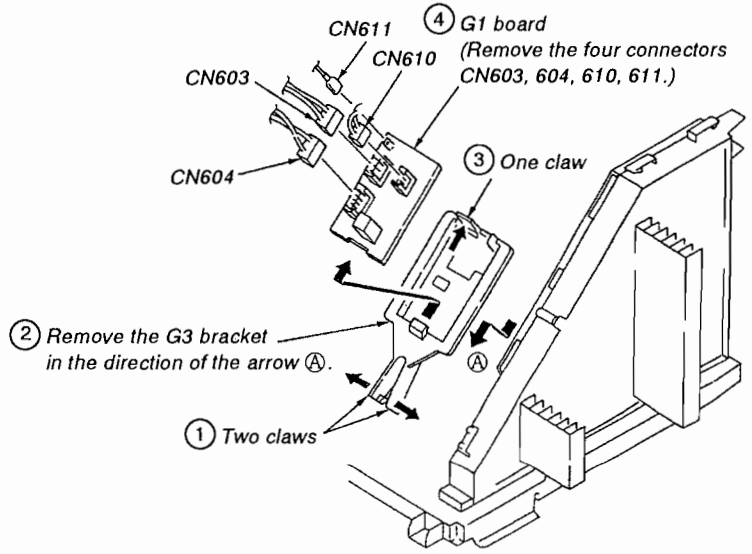

2-9. G BOARD REMOVAL

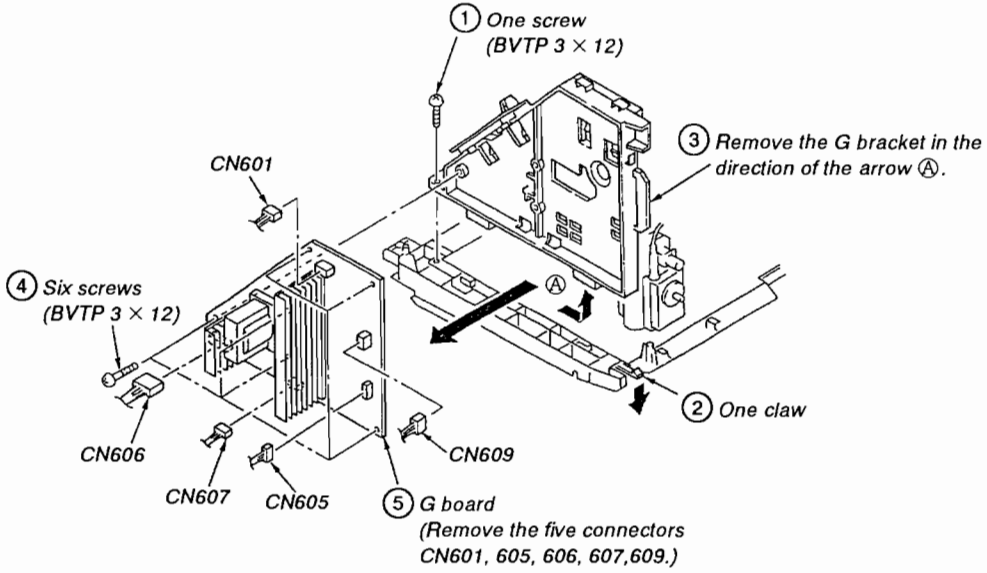

2-10. UT BOARD REMOVAL

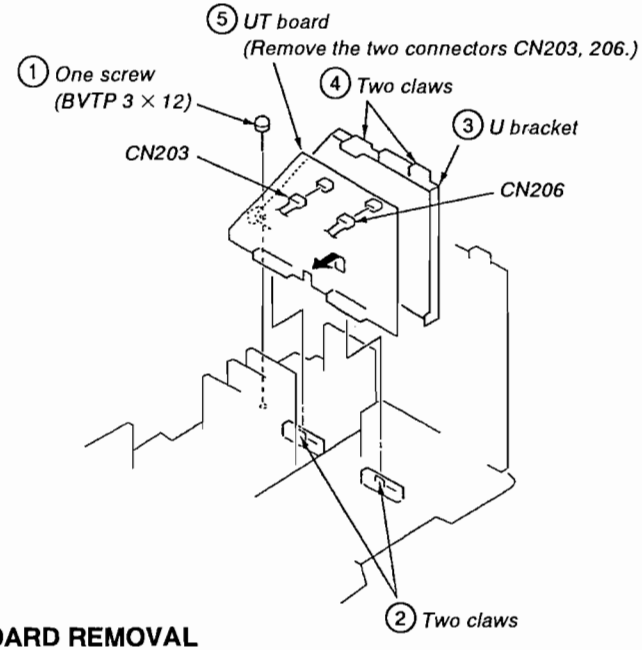

2-11. VC AND D BOARDS REMOVAL

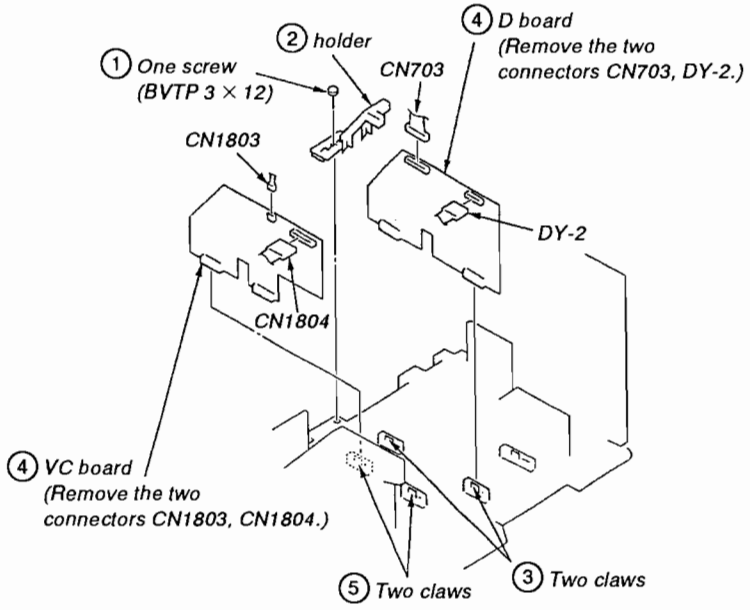

2-12. A BOARD REMOVAL

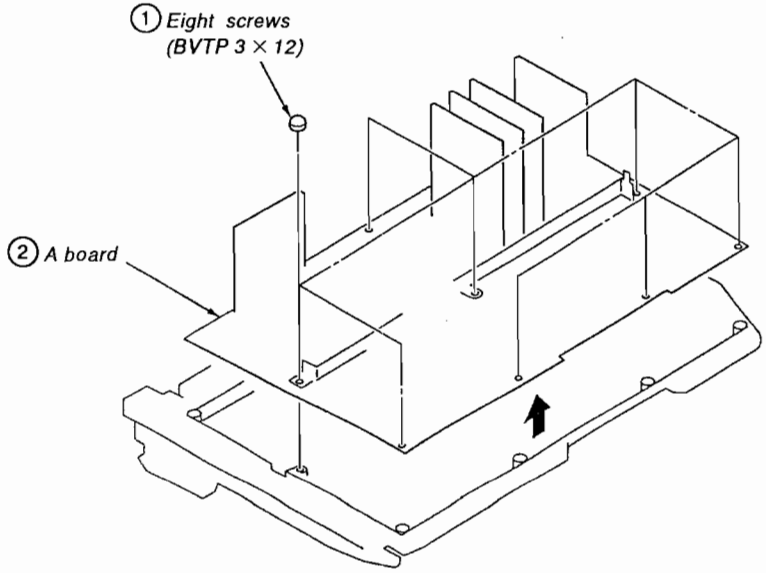

2-13. EXTENSION CABLE (1)

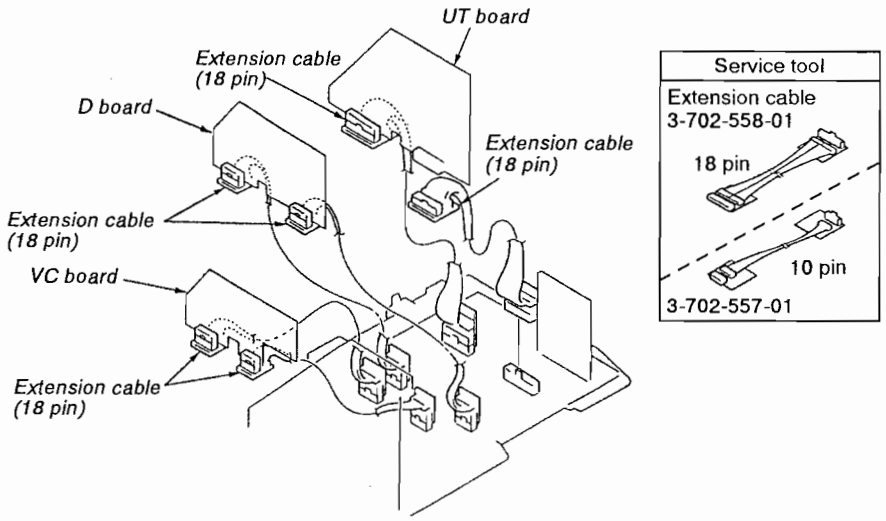

2-14. EXTENSION CABLE (2)

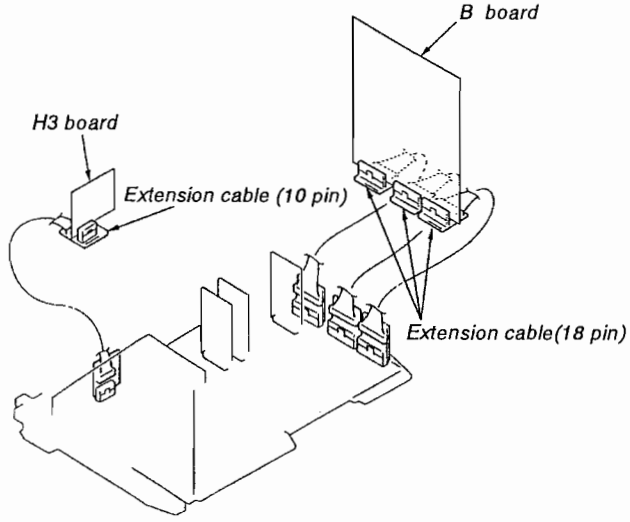

2-15. EXTENSION BOARD

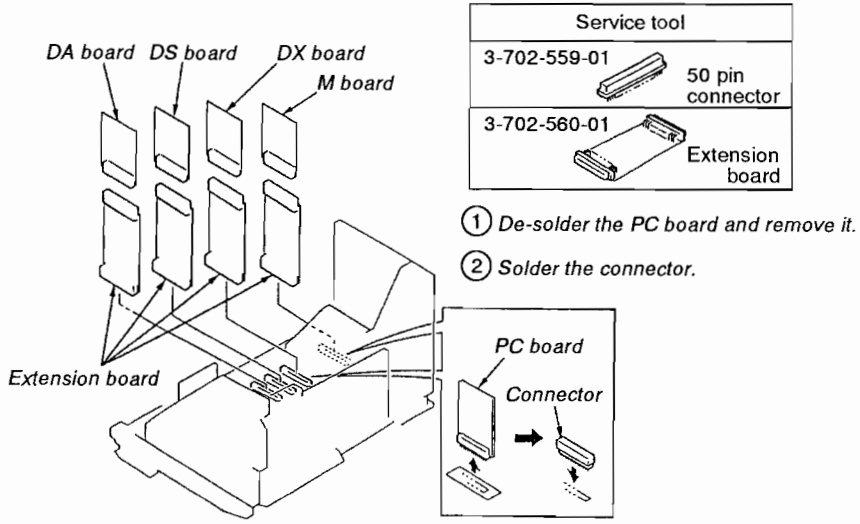

2-16. KEY BOARD UNIT AND BLIND PANEL REMOVAL

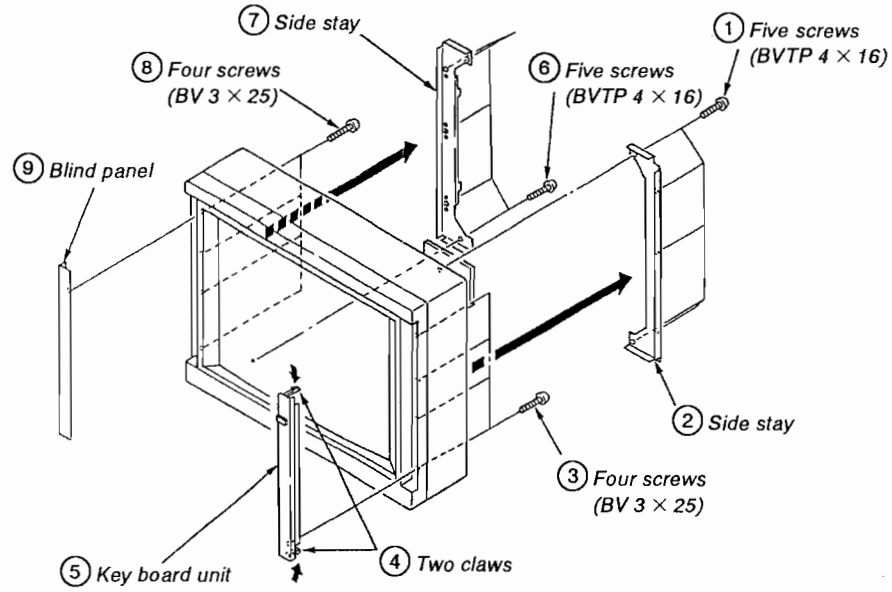

2-17. DEGAUSSING COIL REMOVAL

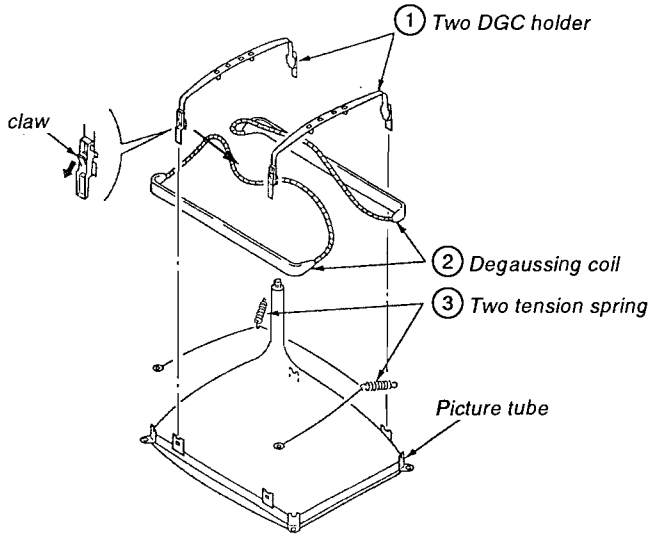

2-18. PICTURE TUBE REMOVAL

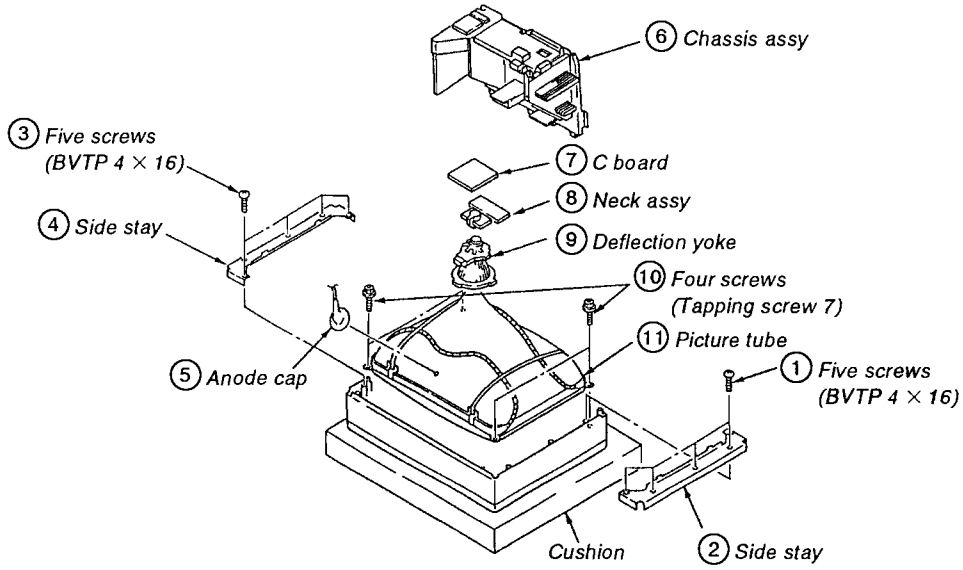

2-19. HARNESS LOCATION

(1) TOP VIEW (RIGHT)

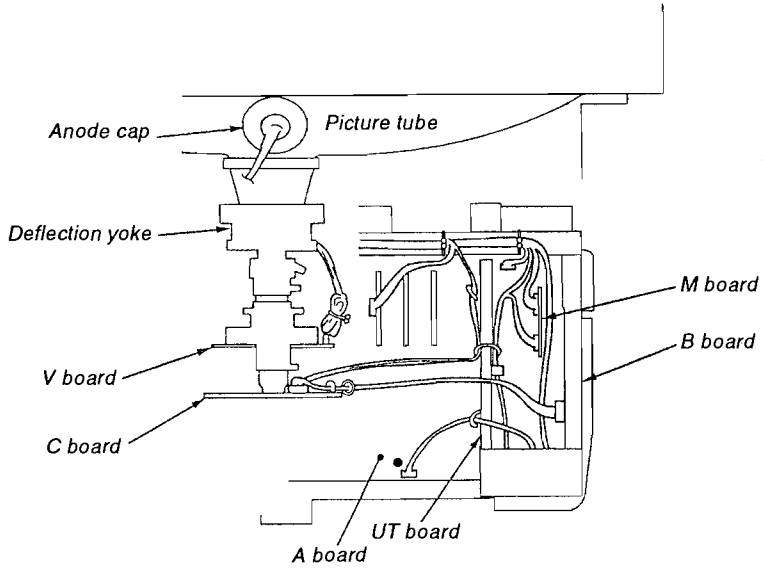

(2) TOP VIEW (LEFT)

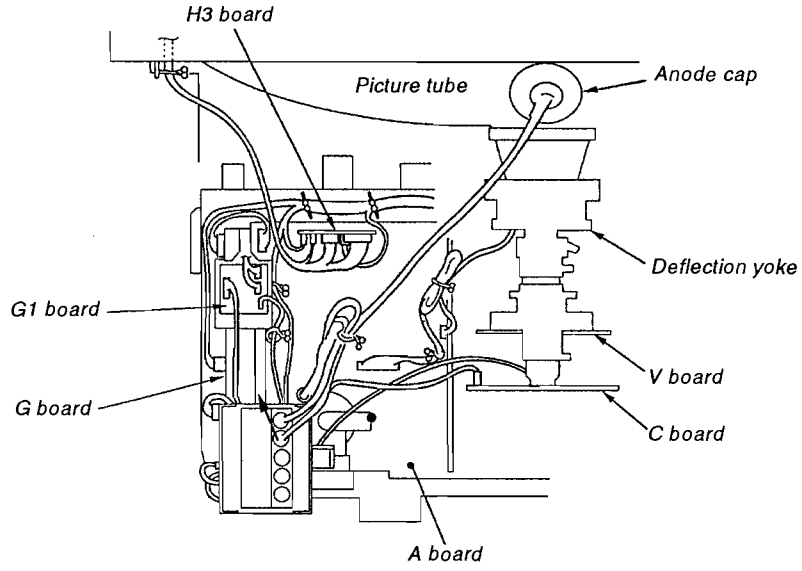

2-17. DEGAUSSING COIL REMOVAL

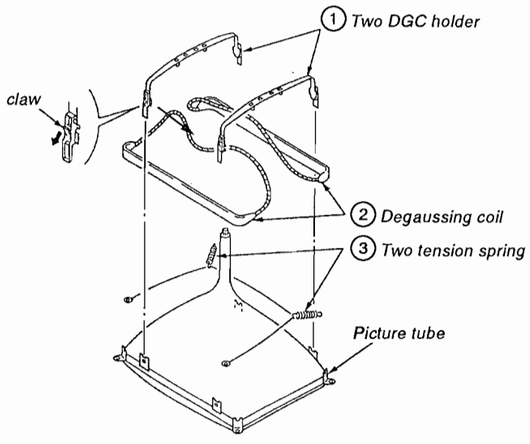

2-18. PICTURE TUBE REMOVAL

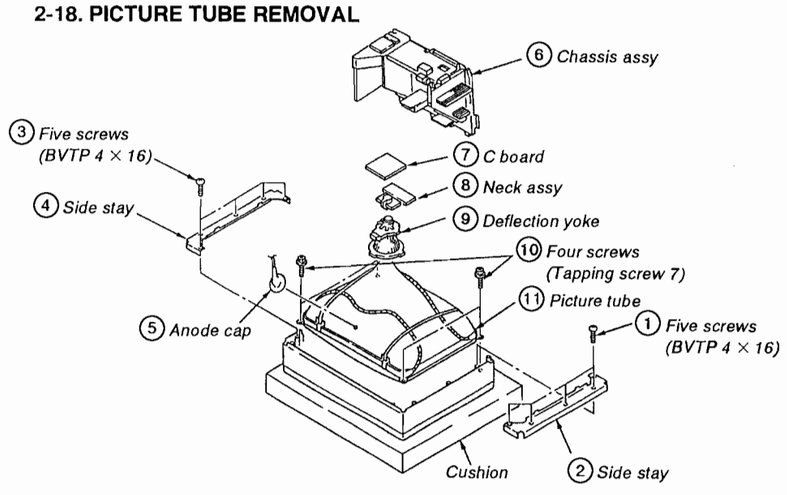

2-19. HARNESS LOCATION

(1) TOP VIEW (RIGHT)

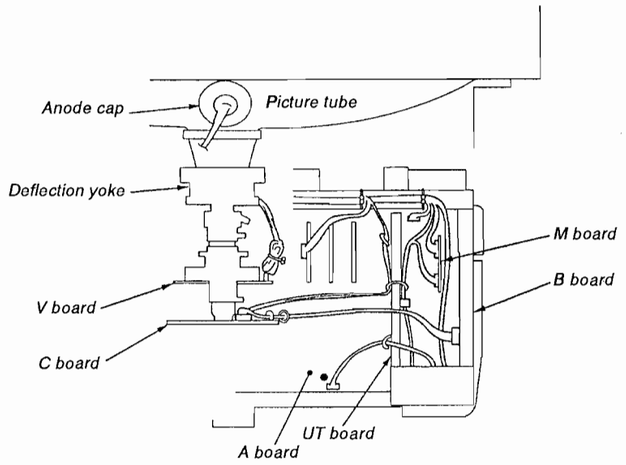

(2) TOP VIEW (LEFT)

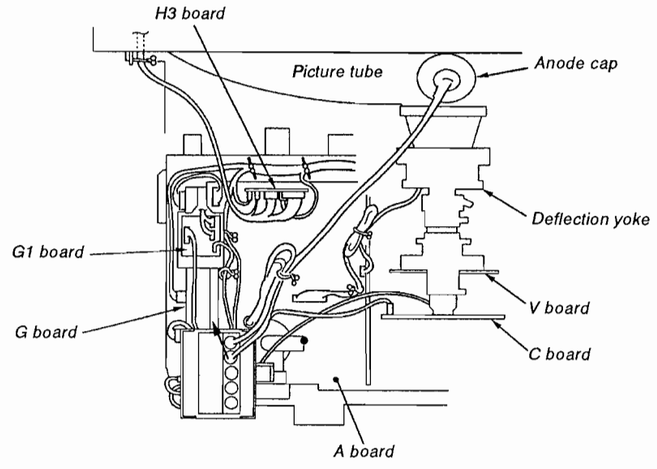

(3) LEFT SIDE VIEW

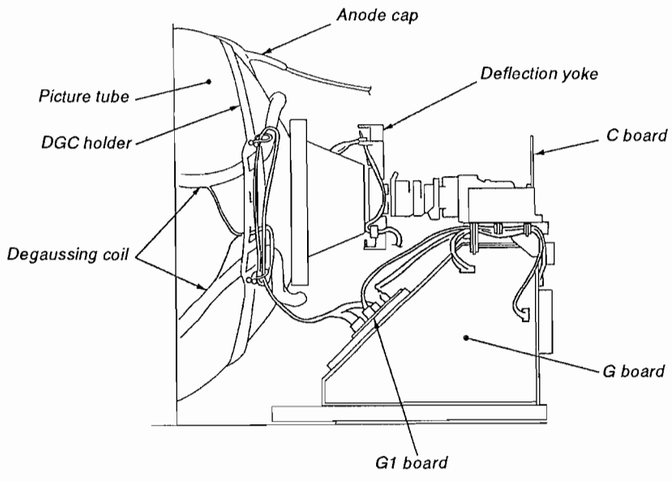

• **REMOVAL OF ANODE-CAP**

Note: Short circuit the anode of the picture tube and the anode cap to the metal chassis, CRT shield, or carbon painted on the CRT, after removing the anode.

• **REMOVING PROCEDURES**

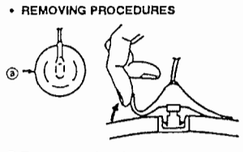

① Turn up one side of the rubber cap in the direction indicated by the arrow Ⓐ.

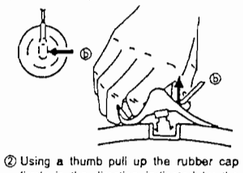

② Using a thumb pull up the rubber cap firmly in the direction indicated by the arrow Ⓑ.

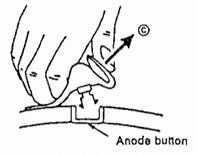

③ When one side of the rubber cap is separated from the anode button, the anode-cap can be removed by turning up the rubber cap and pulling up it in the direction of the arrow Ⓒ.

• **HOW TO HANDLE AN ANODE-CAP**

① Don't hurt the surface of anode-caps with sharp shaped material !
② Don't press the rubber hardly not to hurt inside of anode-caps !
A metal fitting called as shatter-hook terminal is built in the rubber.
③ Don't turn the foot of rubber over hardly ! The shatter-hook terminal will stick out or hurt the rubber.

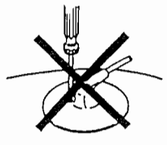

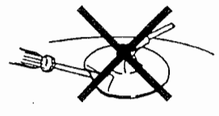

SECTION 3 SAFETY RELATED ADJUSTMENTS

ADJUSTMENT ITEM AND PROCEDURE	EQUIPMENT AND SIGNAL	MEASUREMENT POSITION	ADJUSTMENT LOCATION	ILLUSTRATION AND SHAPE AND NUMBER

② Don't press the rubber hardly not to hurt inside of anode-caps !
A metal fitting called as shatter-hook terminal is built in the rubber.
③ Don't turn the foot of rubber over hardly ! The shatter-hook terminal will stick out or hurt the rubber.

SECTION 3 SAFETY RELATED ADJUSTMENTS

ADJUSTMENT ITEM AND PROCEDURE	EQUIPMENT AND SIGNAL	MEASUREMENT POSITION	ADJUSTMENT LOCATION	ILLUSTRATION AND SHAPE AND NUMBER
CONFIRMATION OF HOLD-DOWN (⊠ RV2501) Be sure to carry out the following adjustments after replacing the following parts (indicated with a ◪ sign in the circuit chart). ◪ IC2504, IC2505, IC2506, IC2507, IC2508, R2509, R2527, R2528, R2529, R2530, R2572, R2576, R2582, R2538, RV2501 HVR (DA board) **(1) CONFIRMATION OF HIGH VOLTAGE VALUE** 1. Connect the direct current voltmeter to the CN2503 ③ pin on the DA board. 2. Receive a VGA480 dot signal and bring CONTRAST and BRIGHTNESS to a minimum. 3. At this time, confirm that the direct current voltmeter reading is 10.73 +1.0V. 4. If the above standard is not fulfilled, adjust RV2501 and carry out step 3, until the standard is fulfilled. 5. Remove the direct current voltmeter. **(2) CONFIRMATION OF VOLTAGE PROTECTOR** 1. Impress 0V direct current voltage to the CN2503 ② pin on the DA board with a direct current stabilizing power source. 2. Gradually raise the direct current voltage and confirm that the hold-down circuit works at 12.20V or less with the luster going off. 3. After confirming, immediately turn off the power and cancel the hold-down circuit.	Digital Multimeter VGA480 Dot Signal Digital Multimeter Direct Current Stabilizer Power Source	CN2503 ③ pin (DA board) CN2503 ② pin	RV2501 (DA board)	CONTRAST, BRIGHTNESS · · · · minimum 10.73 ± 0.1V 12.20V or less – COMPONENT SIDE – 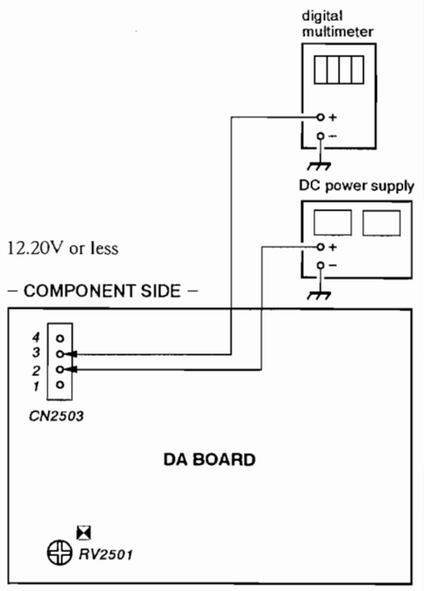

ADJUSTMENT ITEM AND PROCEDURE	EQUIPMENT AND SIGNAL	MEASUREMENT POSITION	ADJUSTMENT LOCATION	ILLUSTRATION AND SHAPE AND NUMBER
(3) CONFIRMATION OF CURRENT PROTECTOR 1. Receive VGA480 dot signal. 2. Bring CONTRAST and BRIGHTNESS to minimum. 3. As shown in Fig. 1, connect 12kΩ or more variable resistance and an ammeter in a straight line between the CN516 ① pin on the A board and the GND. 4. Gradually decrease the resistance value of the variable resistance from the maximum. When the direct current value is at 2.84mA or less, confirm that the hold-down circuit works with the luster going off. 5. After confirming, immediately turn off the power and cancel the hold-down circuit. **(4) CONFIRMATION OF +B PROTECTOR** 1. Impress 121.1+0.1V to the IC512 ④ pin (TP501) on the A board with a direct current stabilizing power source. 2. Confirm that the hold-down circuit works with the luster going off. 3. After confirming, immediately turn off the power and cancel the hold-down circuit.	VGA480 Dot Signal Ammeter Digital Multimeter Direct Current Stabilizer Power Source	CN516 ① pin (A board) IC512 ④ pin (A board)		CONTRAST, BRIGHTNESS · · · · minimum 2.84mA or less 121.1 ± 0.1V – CONDUCTOR SIDE – 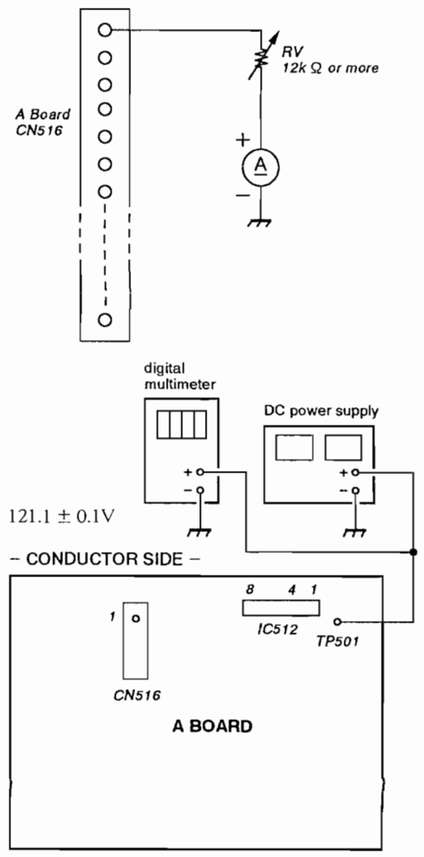

SECTION 4
DIAGRAMS

4-1. BLOCK DIAGRAMS (1)

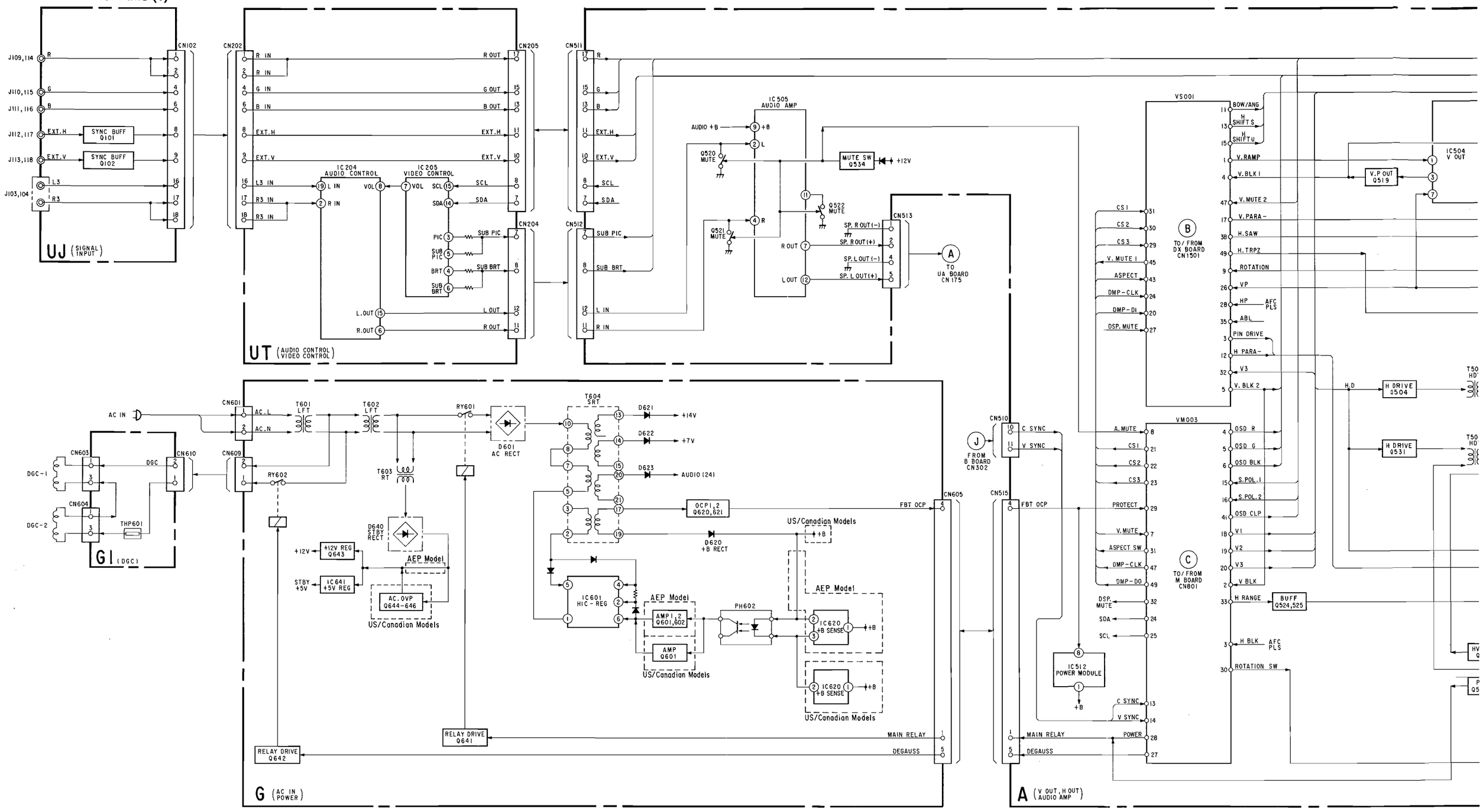

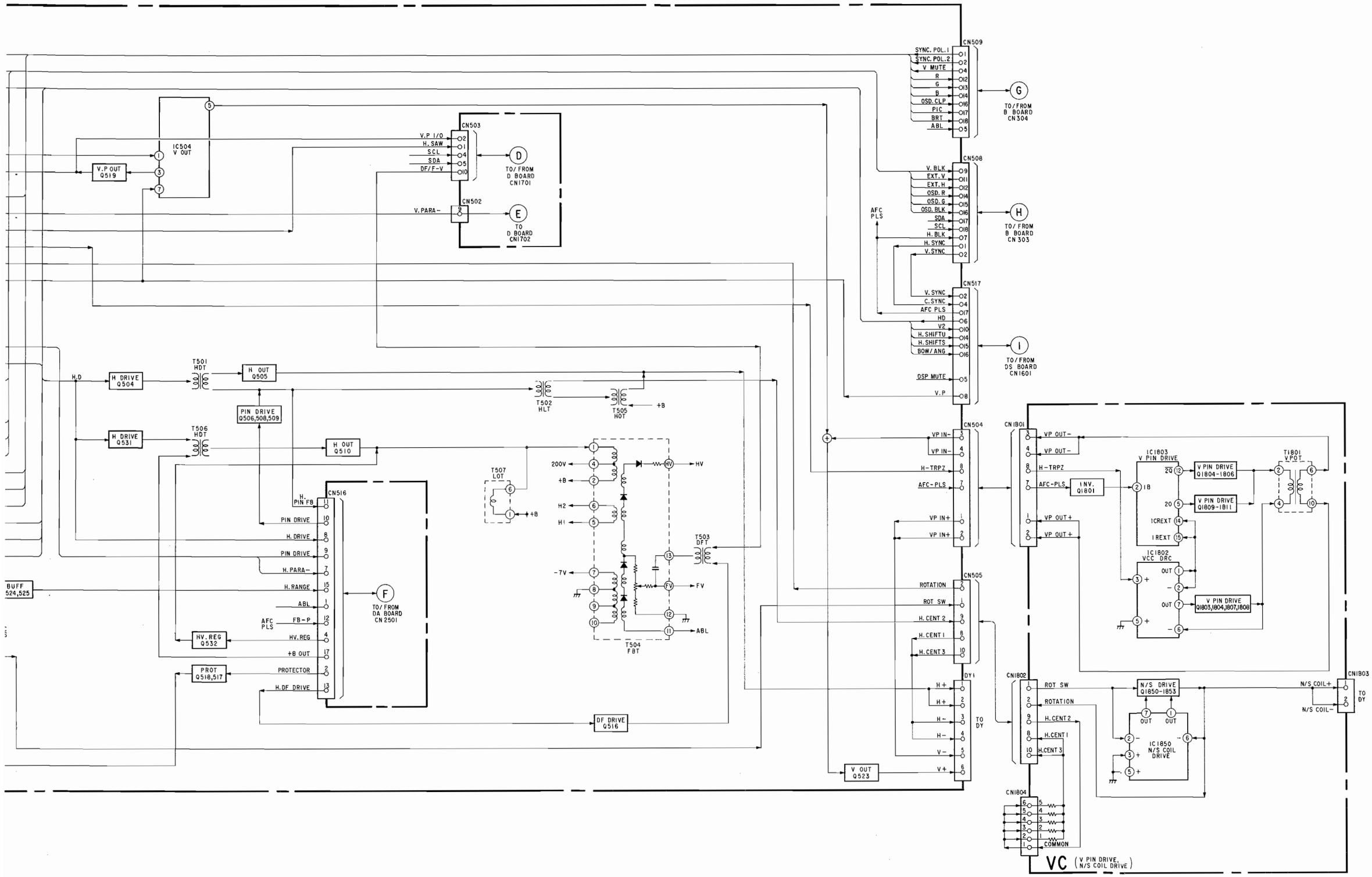
CN509
SYNC. POL. 1
SYNC. POL. 2
V MUTE
R
G
B
OSD. CLP
PIC
BRT
ABL
G
TO/FROM B BOARD CN304
CN508
V. BLK
EXT. V
EXT. H
OSD. R
OSD. G
OSD. BLK
SDA
SCL
H. BLK
H. SYNC
V. SYNC
AFC PLS
H
TO/FROM B BOARD CN303
CN517
V. SYNC
C. SYNC
AFC PLS
HD
V2
H. SHIFTU
H. SHIFTS
BOW/ANG
DSP MUTE
V. P
I
TO/FROM DS BOARD CN1601
CN503
V. P I/O
H. SAW
SCL
SDA
DF/F-V
D
TO/FROM D BOARD CN1701
CN502
V. PARA-
E
TO D BOARD CN1702
IC504 V OUT
V. P OUT Q519
H. D
H DRIVE Q504
T501 HDT
H OUT Q505
PIN DRIVE Q506,508,509
T502 HLT
T505 HOT
+B
H DRIVE Q531
T506 HDT
H OUT Q510
T507 LOT
200V
+B
H2
H1
HV
FV
ABL
T503 DFT
T504 FBT
-7V
CN516
H. PIN FB
PIN DRIVE
H. DRIVE
PIN DRIVE
H. PARA-
H. RANGE
ABL
AFC PLS
FB-P
HV. REG
+B OUT
PROTECTOR
H. DF DRIVE
F
TO/FROM DA BOARD CN2501
BUFF Q524,525
HV. REG Q532
PROT Q518,517
DF DRIVE Q516
AFC PLS
CN504
VP IN-
VP IN-
H-TRPZ
AFC-PLS
VP IN+
VP IN+
CN505
ROTATION
ROT SW
H. CENT 2
H. CENT 1
H. CENT 3
DY1
H+
H+
H-
H-
V-
V+
TO DY
V OUT Q523
CN1801
VP OUT-
VP OUT-
H-TRPZ
AFC-PLS
INV. Q1801
VP OUT+
VP OUT+
IC1803 V PIN DRIVE
V PIN DRIVE Q1804-1806
V PIN DRIVE Q1809-1811
ICREXT
IREXT
T1801 VPOT
IC1802 VCC DRC
V PIN DRIVE Q1803,1804,1807,1808
CN1802
ROT SW
ROTATION
H. CENT 2
H. CENT 1
H. CENT 3
N/S DRIVE Q1850-1853
IC1850 N/S COIL DRIVE
CN1803
N/S COIL+
N/S COIL-
TO DY
CN1804
COMMON
VC (V PIN DRIVE, N/S COIL DRIVE)

BLOCK DIAGRAMS (2)

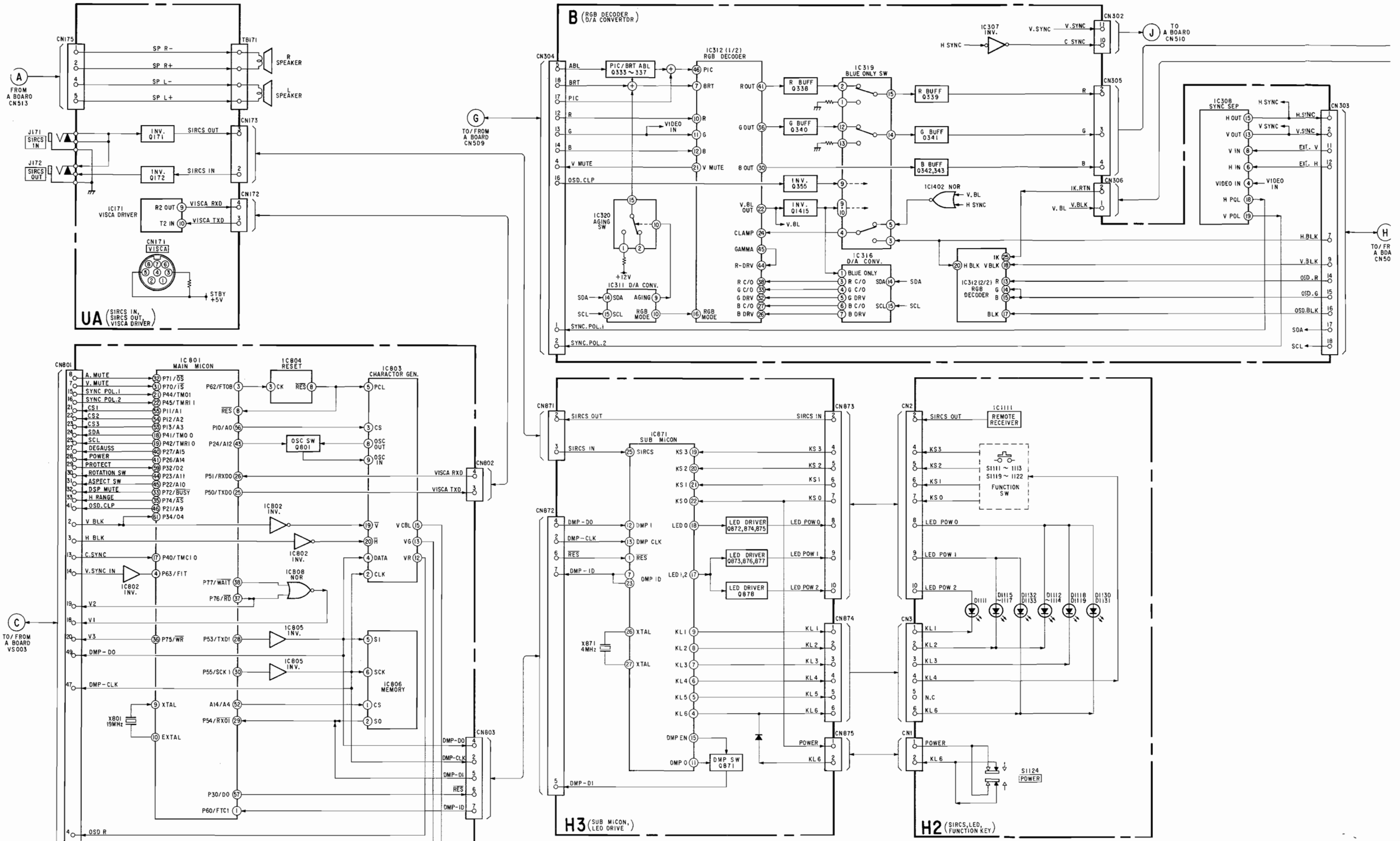

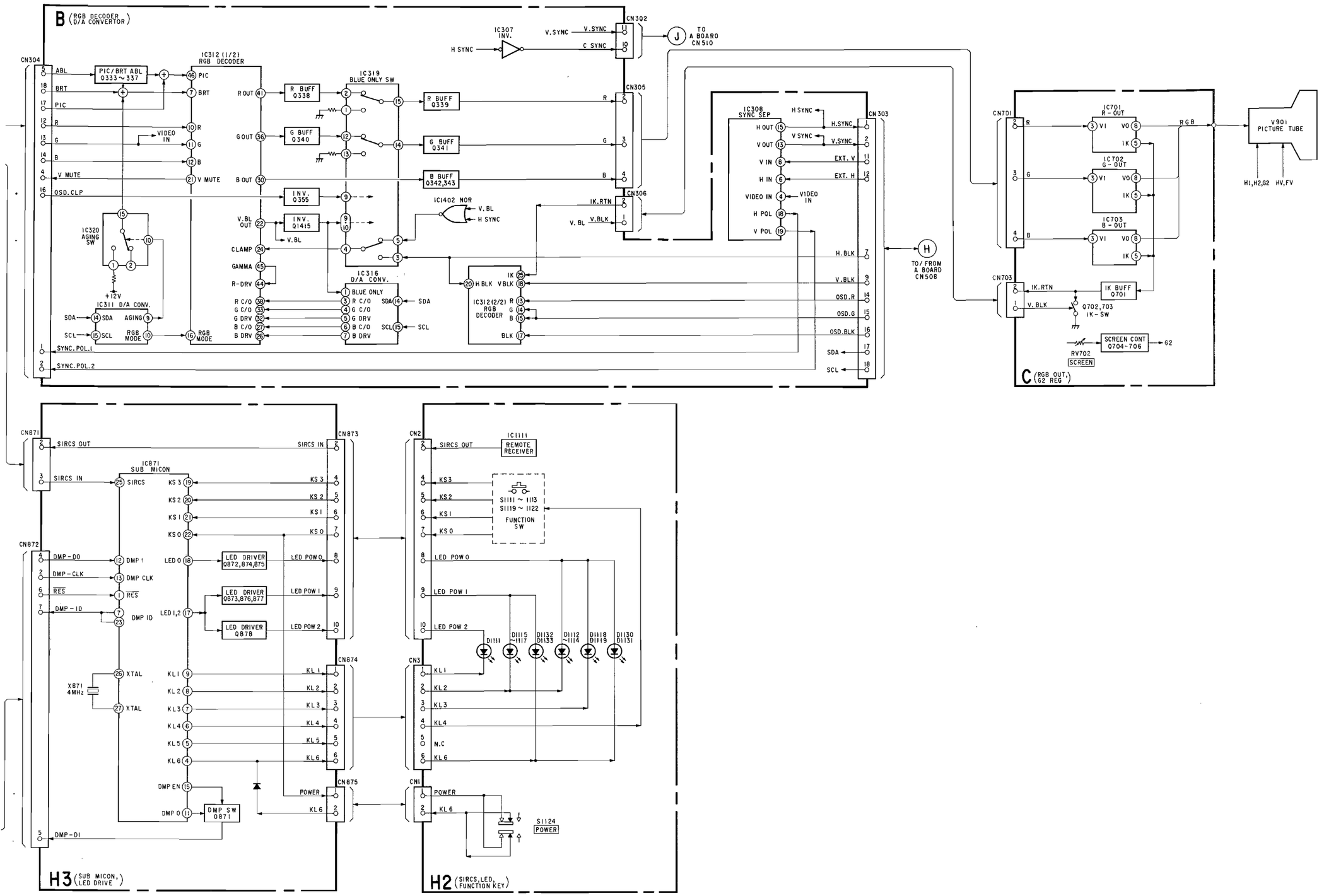
B (RGB DECODER / D/A CONVERTOR)
CN304
ABL
BRT
PIC
R
G
B
V MUTE
OSD.CLP
SYNC.POL.1
SYNC.POL.2
PIC/BRT ABL Q333~337
IC312 (1/2) RGB DECODER
VIDEO IN
IC320 AGING SW
+12V
IC311 D/A CONV.
SDA
SCL
AGING
RGB MODE
R OUT
G OUT
B OUT
V.BL OUT
CLAMP
GAMMA
R-DRV
R C/O
G C/O
G DRV
B C/O
B DRV
R BUFF Q338
G BUFF Q340
B BUFF Q342,343
INV. Q355
INV. Q1415
V.BL
IC319 BLUE ONLY SW
IC316 D/A CONV.
BLUE ONLY
R C/O
G C/O
G DRV
B C/O
B DRV
IC1402 NOR
V.BL
H SYNC
R BUFF Q339
G BUFF Q341
B BUFF Q342,343
IC307 INV.
V.SYNC
C SYNC
CN302
J TO A BOARD CN510
CN305
CN306
IK.RTN
V.BL
IC308 SYNC SEP
H OUT
V OUT
V IN
H IN
VIDEO IN
H POL
V POL
EXT. V
EXT. H
CN303
H.BLK
V.BLK
OSD.R
OSD.G
OSD.BLK
IC312 (2/2) RGB DECODER
IK
VBLK
BLK
H TO/FROM A BOARD CN508
CN701
IC701 R-OUT
IC702 G-OUT
IC703 B-OUT
VI
VO
IK
R.G.B
V901 PICTURE TUBE
H1,H2,G2 HV,FV
CN703
IK BUFF Q701
Q702,703 IK-SW
RV702 SCREEN
SCREEN CONT Q704-706
G2
C (RGB OUT, G2 REG)
CN871
SIRCS OUT
SIRCS IN
CN873
IC871 SUB MICON
SIRCS
KS 3
KS 2
KS 1
KS 0
CN872
DMP-DO
DMP-CLK
RES
DMP-ID
DMP-DI
DMP 1
DMP CLK
DMP ID
XTAL
X871 4MHz
LED 0
LED 1,2
LED DRIVER Q872,874,875
LED DRIVER Q873,876,877
LED DRIVER Q878
LED POW 0
LED POW 1
LED POW 2
CN874
KL 1
KL 2
KL 3
KL 4
KL 5
KL 6
DMP EN
DMP 0
DMP SW Q871
CN875
POWER
H3 (SUB MICON, LED DRIVE)
CN2
IC1111 REMOTE RECEIVER
S1111~1113
S1119~1122
FUNCTION SW
LED POW 0
LED POW 1
LED POW 2
D1111
D1115~1117
D1132 D1133
D1112~1114
D1118 D1119
D1130 D1131
CN3
KL 1
KL 2
KL 3
KL 4
N.C
KL 6
CN1
POWER
KL 6
S1124 POWER
H2 (SIRCS, LED, FUNCTION KEY)

BLOCK DIAGRAMS (3)

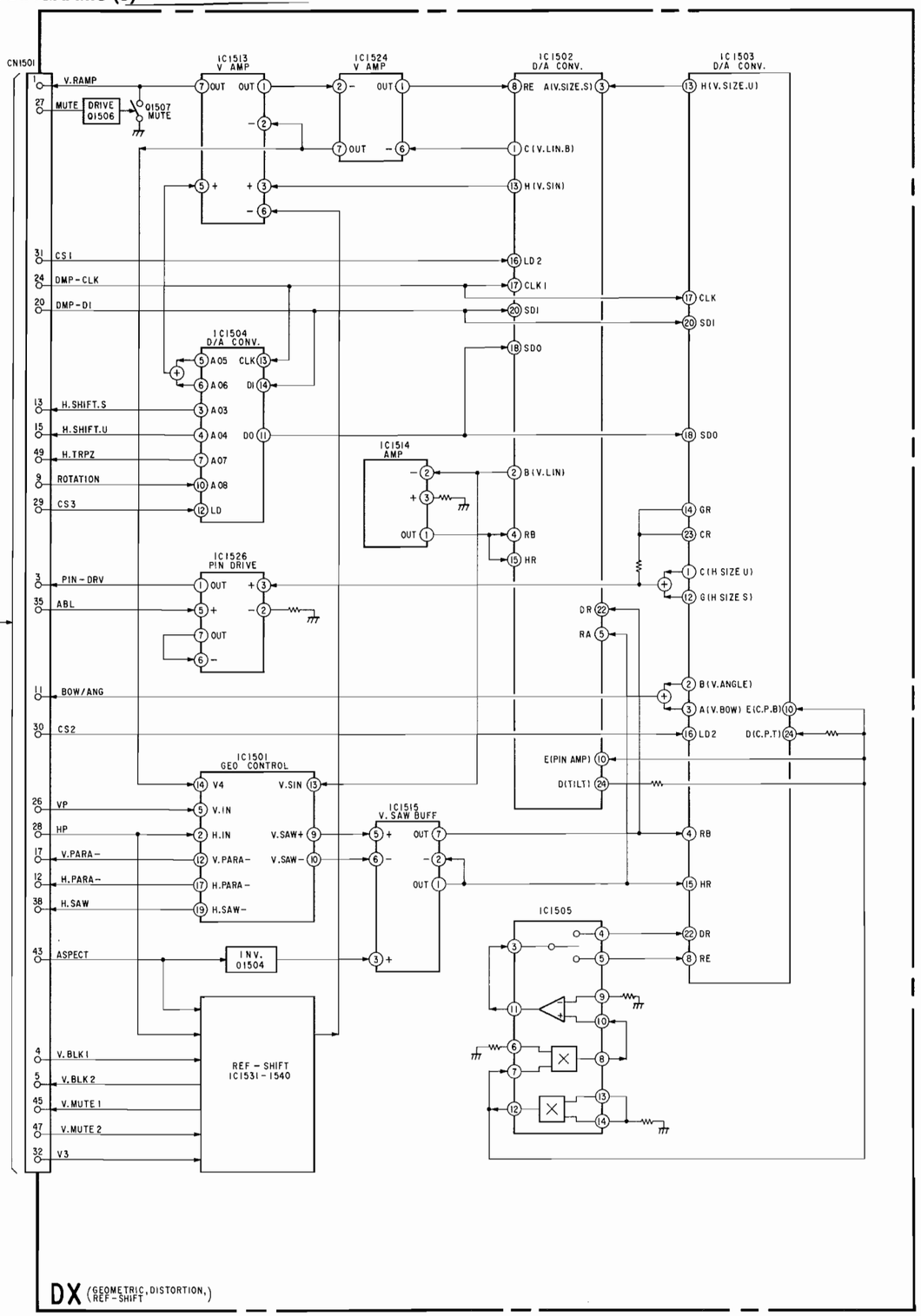

DX (GEOMETRIC, DISTORTION, REF-SHIFT)

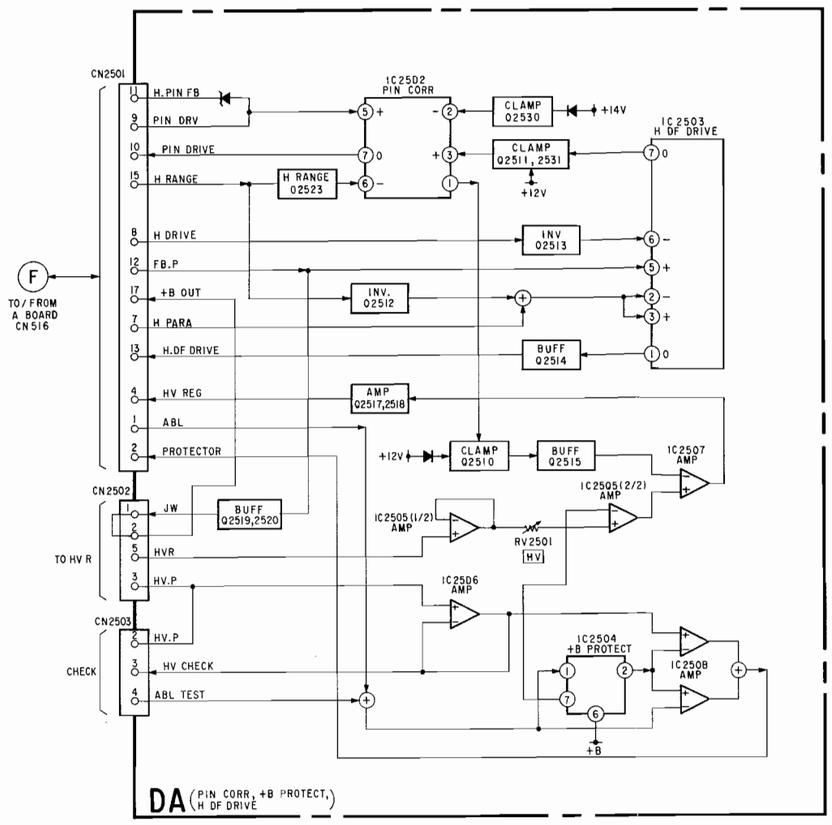

DA (PIN CORR, +B PROTECT, H DF DRIVE)

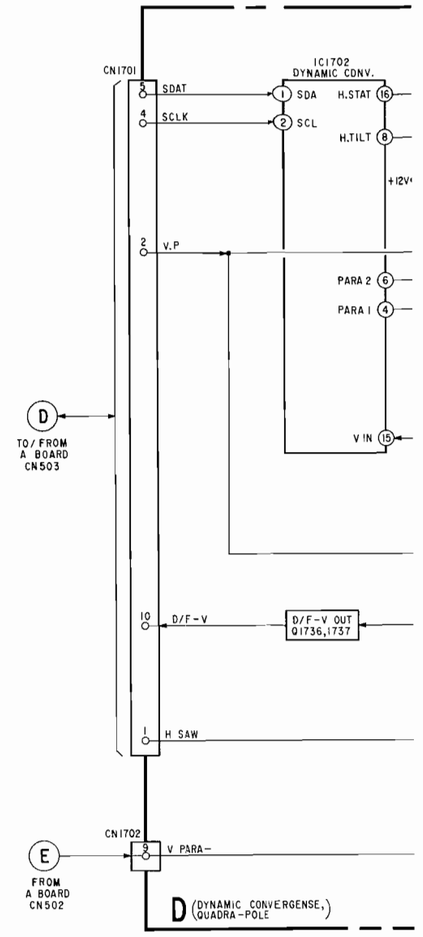

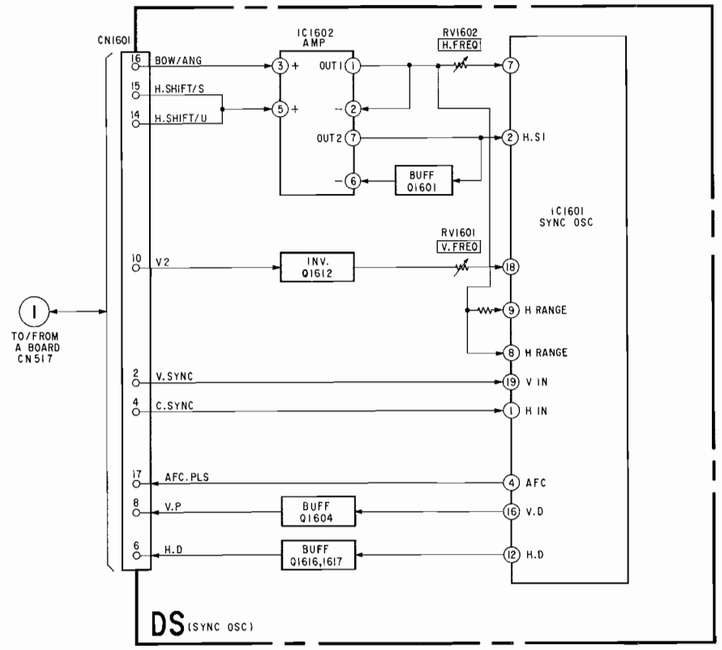

DS (SYNC OSC)

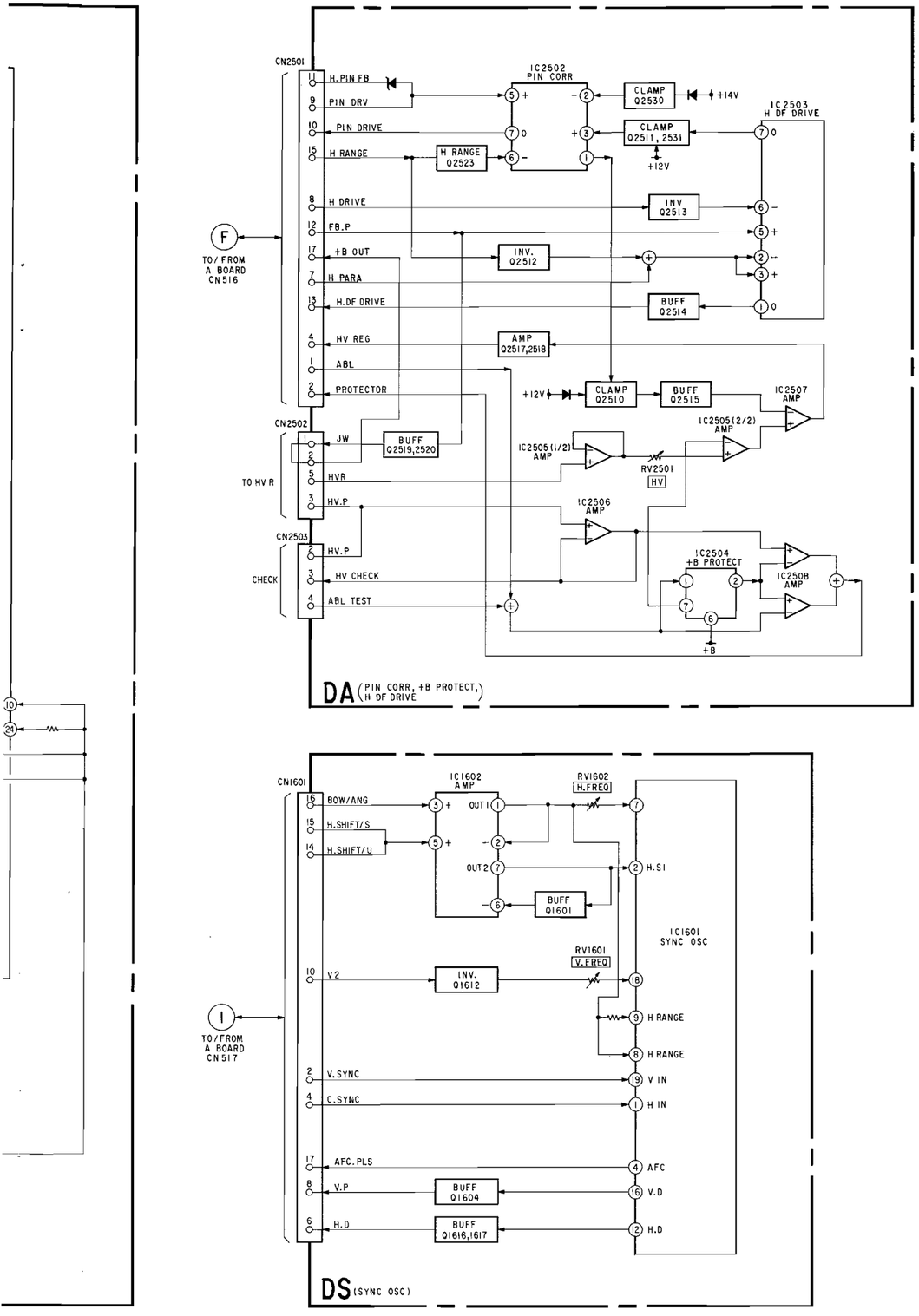
CN2501
H.PIN FB
PIN DRV
PIN DRIVE
H RANGE
H DRIVE
FB.P
+B OUT
H PARA
H.DF DRIVE
HV REG
ABL
PROTECTOR
IC2502 PIN CORR
CLAMP Q2530
+14V
CLAMP Q2511, 2531
+12V
H RANGE Q2523
IC2503 H DF DRIVE
INV. Q2513
INV. Q2512
BUFF Q2514
AMP Q2517,2518
CLAMP Q2510
BUFF Q2515
IC2507 AMP
IC2505(2/2) AMP
IC2505(1/2) AMP
RV2501
HV
CN2502
JW
BUFF Q2519,2520
TO HV R
HVR
HV.P
IC2506 AMP
CN2503
HV.P
CHECK
HV CHECK
ABL TEST
IC2504 +B PROTECT
IC2508 AMP
+B
F
TO/FROM A BOARD CN516
DA (PIN CORR, +B PROTECT, H DF DRIVE)
CN1601
BOW/ANG
H.SHIFT/S
H.SHIFT/U
IC1602 AMP
RV1602 H.FREQ
OUT1
OUT2
BUFF Q1601
H.SI
IC1601 SYNC OSC
RV1601 V.FREQ
V2
INV. Q1612
H RANGE
V.SYNC
C.SYNC
AFC.PLS
V.P
BUFF Q1604
H.D
BUFF Q1616,1617
AFC
V.D
V IN
H IN
I
TO/FROM A BOARD CN517
DS (SYNC OSC)
CN1701
SDAT
SCLK
V.P
D/F-V
H SAW
IC1702 DYNAMIC CONV.
SDA
SCL
H.STAT
H.TILT
+12V
H.STAT-DRV Q1704,1706
H.STAT-OUT Q1707
CONV. DRV Q1702
CONV. OUT Q1713
CONV. REG 1, 2 Q1703,1705
Q1711 V-RESET
IC1703 F.B.OP-AMP
PARA 2
PARA 1
Y.BOW-OUT Q1710
C.BOW-OUT Q1709,1744
IC1704 V AMP
V IN
IC1731(1/2) AMP
BUFF Q1712
IC1731(2/2) D/F-V AMP
D/F-V OUT Q1736,1737
IC1733 DQP DRIVE
QP V OUT Q1738,1739
DQP OUT Q1740,1743
RV1701
FOCUS BALANCE
CN1702
V PARA-
E
FROM A BOARD CN502
D (DYNAMIC CONVERGENSE, QUADRA-POLE)
DY-2
CY-
CY+
TO DY
CN1703
CN901
Q.P+
Q.P-
QP
V
NECK ASSY
D
TO/FROM A BOARD CN503

4-2. FRAME SCHEMATIC DIAGRAM

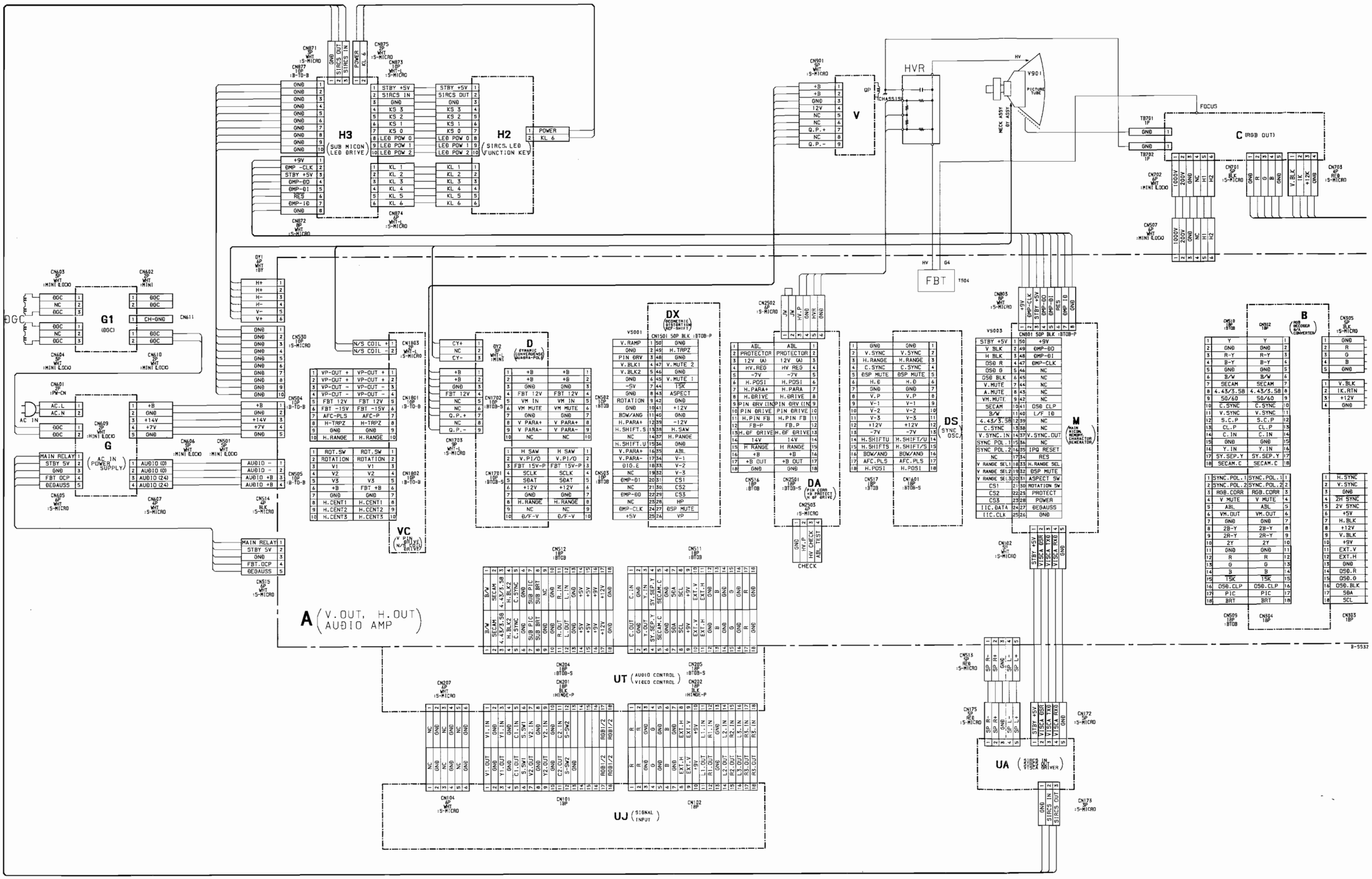

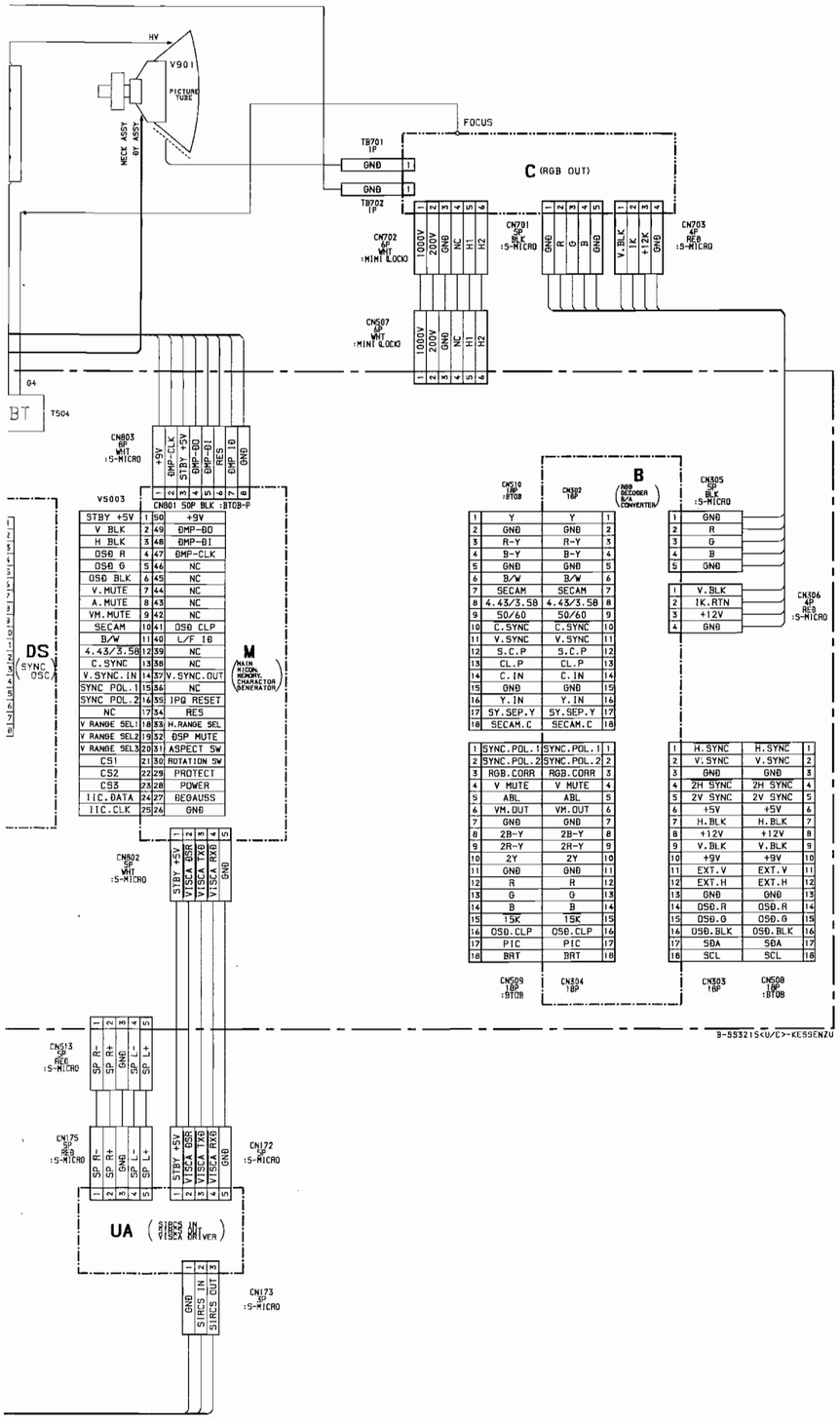

4-3. CIRCUIT BOARDS LOCATION

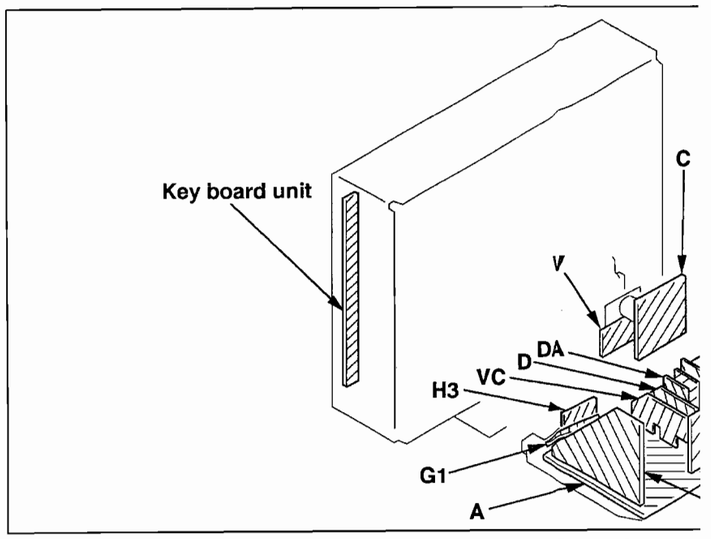

4-4. PRINTED WIRING BOARDS AND SCHEMATIC DIAGRAMS

Note :

- All capacitors are in μF unless otherwise noted. pF : μμF 50V or less are not indicated except for electrolytics and tantalums.
- All electrolytics are in 50V unless otherwise specified.
- All resistors are in ohms.
  kΩ = 1000 Ω, MΩ = 1000kΩ
- Indication of resistance, which dose not have one for rating electrical power, is as follows.

  Pitch : 5mm
  Rating electrical power : ¼W

- : nonflammable resistor.
- : fusible resistor.
- △ : internal component.
- : panel designation and adjustment for repair.
- All variable and adjustable resistors have characteristic curve B, unless otherwise noted.
- ⊥ : earth-ground.
- : earth-chassis.
- The components identified by ⋈ in this basic schematic diagram have been carefully factory-selected for each set in order to satisfy regulations regarding X-ray radiation.
  Should replacement be required, replace only with the value originally used.
- When replacing components identified by ◪, make the necessary adjustments indicated. If results do not meet the specified value, change the component identified by ⋈ and repeat the adjustment until the specified value is achieved.
  (Refer to RV2501 adjustment on Page 00, 00.)
- When replacing the part in below table, be sure to perform the related adjustment.

Part replaced (◪)		Adjustment (⋈)
IC2504, IC2505, IC2506, IC2507, IC2508, R2509, R2527, R2528, R2529, R2530, R2572, R2576, R2582, R2583, RV2501 HVR	DA BOARD	RV2501 (HOLD-DOWN)

- Readings are taken with a color-bar signal input.
- Readings are taken with a 10MΩ digital multimeter.
- Voltages are dc with respect to ground unless otherwise noted.

- Voltage variatio
  tolerances.
- As to the volt
  Schematic Diag
- All voltages ar
  * : Measurem
  : B + lin
  : B – lin
  (Actual meas
  : sign
- Circled numbe

Reference inform

RESISTOR :

COIL :

CAPACITOR :

Note: The c
⚠ are
numb

Note: Les c
une n
pour
piéce

4-3. CIRCUIT BOARDS LOCATION

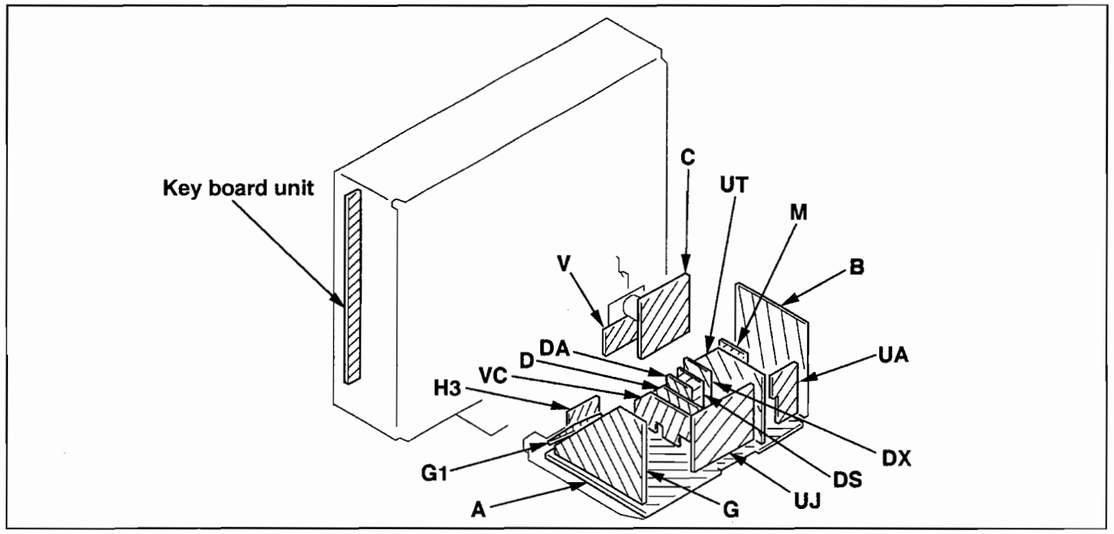

4-4. PRINTED WIRING BOARDS AND SCHEMATIC DIAGRAMS

Note :

- All capacitors are in μF unless otherwise noted. pF : μμF 50V or less are not indicated except for electrolytics and tantalums.
- All electrolytics are in 50V unless otherwise specified.
- All resistors are in ohms.
  kΩ = 1000 Ω, MΩ = 1000kΩ
- Indication of resistance, which dose not have one for rating electrical power, is as follows.

Pitch : 5mm
Rating electrical power : ¼W

- : nonflammable resistor.
- : fusible resistor.
- △ : internal component.
- : panel designation and adjustment for repair.
- All variable and adjustable resistors have characteristic curve B, unless otherwise noted.
- : earth-ground.
- : earth-chassis.
- The components identified by ⋈ in this basic schematic diagram have been carefully factory-selected for each set in order to satisfy regulations regarding X-ray radiation.
  Should replacement be required, replace only with the value originally used.
- When replacing components identified by ◪, make the necessary adjustments indicated. If results do not meet the specified value, change the component identified by ⋈ and repeat the adjustment until the specified value is achieved.
  (Refer to RV2501 adjustment on Page 00, 00.)
- When replacing the part in below table, be sure to perform the related adjustment.

Part replaced (◪)		Adjustment (⋈)
IC2504, IC2505, IC2506, IC2507, IC2508, R2509, R2527, R2528, R2529, R2530, R2572, R2576, R2582, R2583, RV2501 HVR	DA BOARD	RV2501 (HOLD-DOWN)

- Readings are taken with a color-bar signal input.
- Readings are taken with a 10M Ω digital multimeter.
- Voltages are dc with respect to ground unless otherwise noted.
- Voltage variations may be noted due to normal production tolerances.
- As to the voltage volue shown by the semiconductors on the Schematic Diagram, see the anther list.
- All voltages are in V.
  * : Measurement impossibillity.
- : B + line.
- : B − line.
  (Actual measured value may be different).
- : signal path.(RF)
- Circled numbers are waveform references.

Reference information

RESISTOR	:	RN	METAL FILM
	:	RC	SOLID
	:	FPRD	NONFLAMMABLE CARBON
	:	FUSE	NONFLAMMABLE FUSIBLE
	:	RW	NONFLAMMABLE WIREWOUND
	:	RS	NONFLAMMABLE METAL OXIDE
	:	RB	NONFLAMMABLE CEMENT
	:	※	ADJUSTMENT RESISTOR
	:	LF-8L	MICRO INDUCTOR
	:	TA	TANTALUM
COIL			
CAPACITOR	:	PS	STYROL
	:	PP	POLYPROPYLENE
	:	PT	MYLAR
	:	MPS	METALIZED POLYESTER
	:	MPP	METALIZED POLYPROPYLENE
	:	ALB	BIPOLAR
	:	ALT	HIGH TEMPERATURE
	:	ALR	HIGH RIPPLE

Note: The components identified by shading and mark ⚠ are critical for safety. Replace only with part number specified.

Note: Les composants identifiés par une trame et par une marque ⚠ sont d'une importance critique pour la sécurité. Ne les remplacer que per des piéces de numéro spécifié.

Schematic diagram

← FRAM board

Schematic diagram

A (1/2) board →

A [V. OUT, H. OUT / AUDIO AMP]

– A BOARD –

Note :

- : Pattern from the side which enables seeing.
- : Pattern of the rear side.

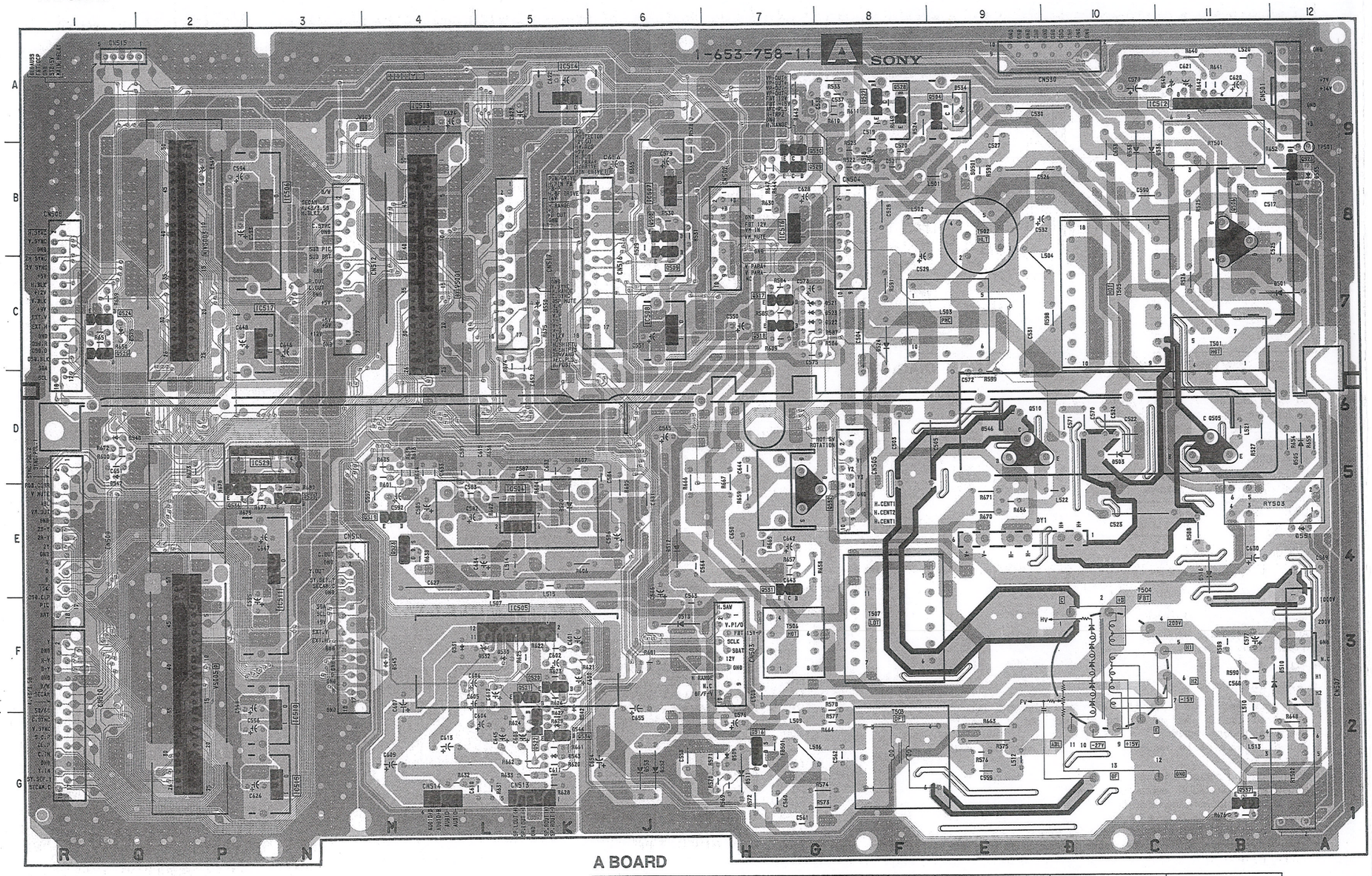

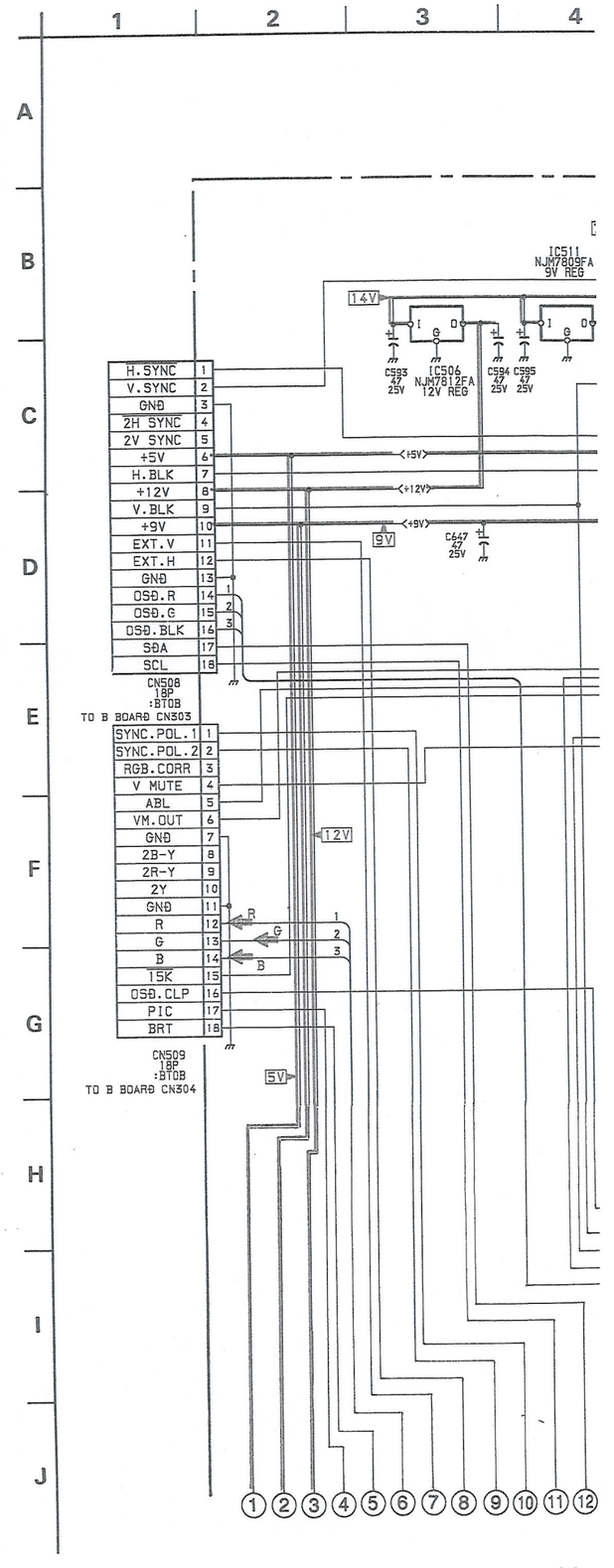

NOTE:
The circuit indicated as left contains high voltage of over 600 Vp-p. Care must be paid to prevent an electric shock in inspection or repairing.

A BOARD

IC

IC504	E – 5	IC516	B – 7	Q519	E – 4	D503	D – 10	D525	C – 1	D548	D – 1
IC505	F – 5	IC517	C – 3	Q520	F – 5	D505	D – 12	D530	F – 5	D549	B – 2
IC506	B – 3	**TRANSISTOR**		Q521	F – 5	D509	G – 7	D531	F – 4	D550	C – 5
IC507	B – 6	Q504	A – 9	Q522	G – 5	D510	F – 12	D532	F – 5		
IC508	C – 6	Q505	D – 11	Q523	E – 4	D511	G – 7	D533	B – 10		
IC510	F – 3	Q506	B – 11	Q524	C – 1	D512	E – 6	D536	B – 10		
IC511	E – 3	Q508	B – 6	Q525	C – 1	D513	F – 6	D540	A – 11		
IC512	A – 11	Q509	B – 6	Q531	E – 7	D516	E – 11	D542	G – 5		
IC513	A – 4	Q510	D – 9	Q532	E – 7	D520	E – 5	D543	G – 5		
IC514	A – 5	Q516	G – 7	Q534	G – 5	D521	C – 7	D544	G – 5		
IC515	G – 3	Q517	C – 7	**DIODE**		D522	C – 7	D545	F – 4		
		Q518	C – 7	D501	C – 12	D523	C – 7	D546	D – 9		
						D524	C – 8	D547	D – 1		

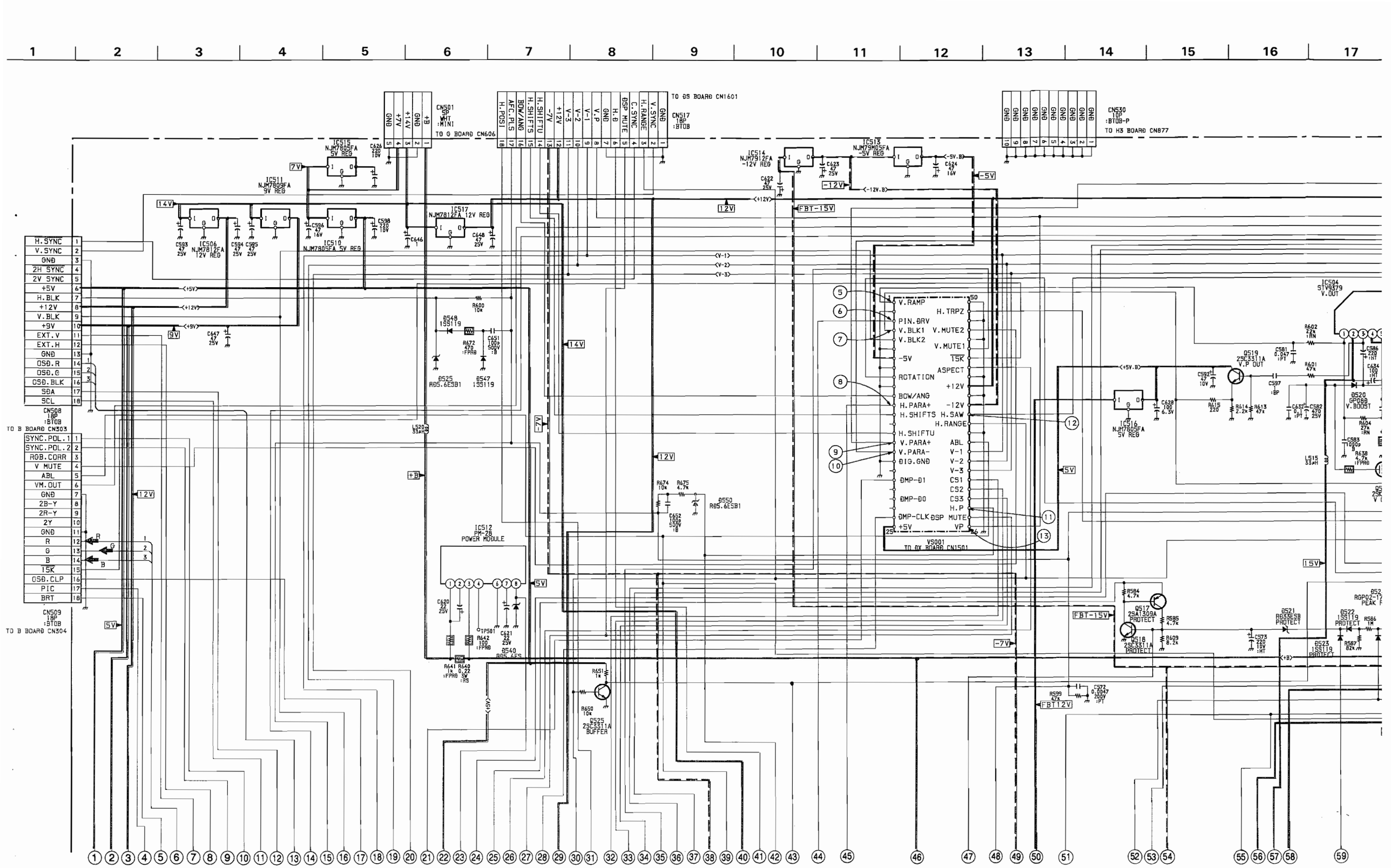
1 2 3 4 5 6 7 8 9 10 11 12 13 14 15 16 17
CN501 5P WHT :MINI TO G BOARD CN606
CN517 18P :BTOB TO BS BOARD CN1601
CN530 10P :BTOB-P TO H3 BOARD CN877
IC515 NJM7805FA 5V REG
IC511 NJM7809FA 9V REG
IC506 NJM7812FA 12V REG
IC510 NJM7805FA 5V REG
IC517 NJM7812FA 12V REG
IC514 NJM7912FA -12V REG
IC513 NJM79M05FA -5V REG
IC516 NJM7805FA 5V REG
IC504 STV9379 V.OUT
H.SYNC 1
V.SYNC 2
GND 3
2H SYNC 4
2V SYNC 5
+5V 6
H.BLK 7
+12V 8
V.BLK 9
+9V 10
EXT.V 11
EXT.H 12
GND 13
OSD.R 14
OSD.G 15
OSD.BLK 16
SDA 17
SCL 18
CN508 18P :BTOB TO B BOARD CN303
SYNC.POL.1 1
SYNC.POL.2 2
RGB.CORR 3
V MUTE 4
ABL 5
VM.OUT 6
GND 7
2B-Y 8
2R-Y 9
2Y 10
GND 11
R 12
G 13
B 14
15K 15
OSD.CLP 16
PIC 17
BRT 18
CN509 18P :BTOB TO B BOARD CN304
IC512 PM-28 POWER MODULE
V.RAMP
PIN.DRV
V.BLK1
V.BLK2
-5V
ROTATION
BOW/ANG
H.PARA+
H.SHIFTS
H.SHIFTU
V.PARA+
V.PARA-
DIG.GND
DMP-D1
DMP-D0
DMP-CLK
+5V
H.TRPZ
V.MUTE2
V.MUTE1
15K
ASPECT
+12V
-12V
H.SAW
H.RANGE
ABL
V-1
V-2
V-3
CS1
CS2
CS3
H.P
DSP MUTE
VP
VS001 TO AX BOARD CN1501
FBT-15V
FBT12V
Q519 2SC3311A V.P OUT
Q520 GP08B V.BOOST
Q517 2SA1309A PROTECT
Q518 2SC3311A PROTECT
Q521 RD33ESB PROTECT
Q522 1SS119 PROTECT
Q523 1SS119 PROTECT
Q525 2SC3311A BUFFER
D548 1SS119
D525 RD5.6ESB1
D547 1SS119
D550 RD5.6ESB1
D540 RD5.6ES
L520 33uH
L515 33uH
TP581

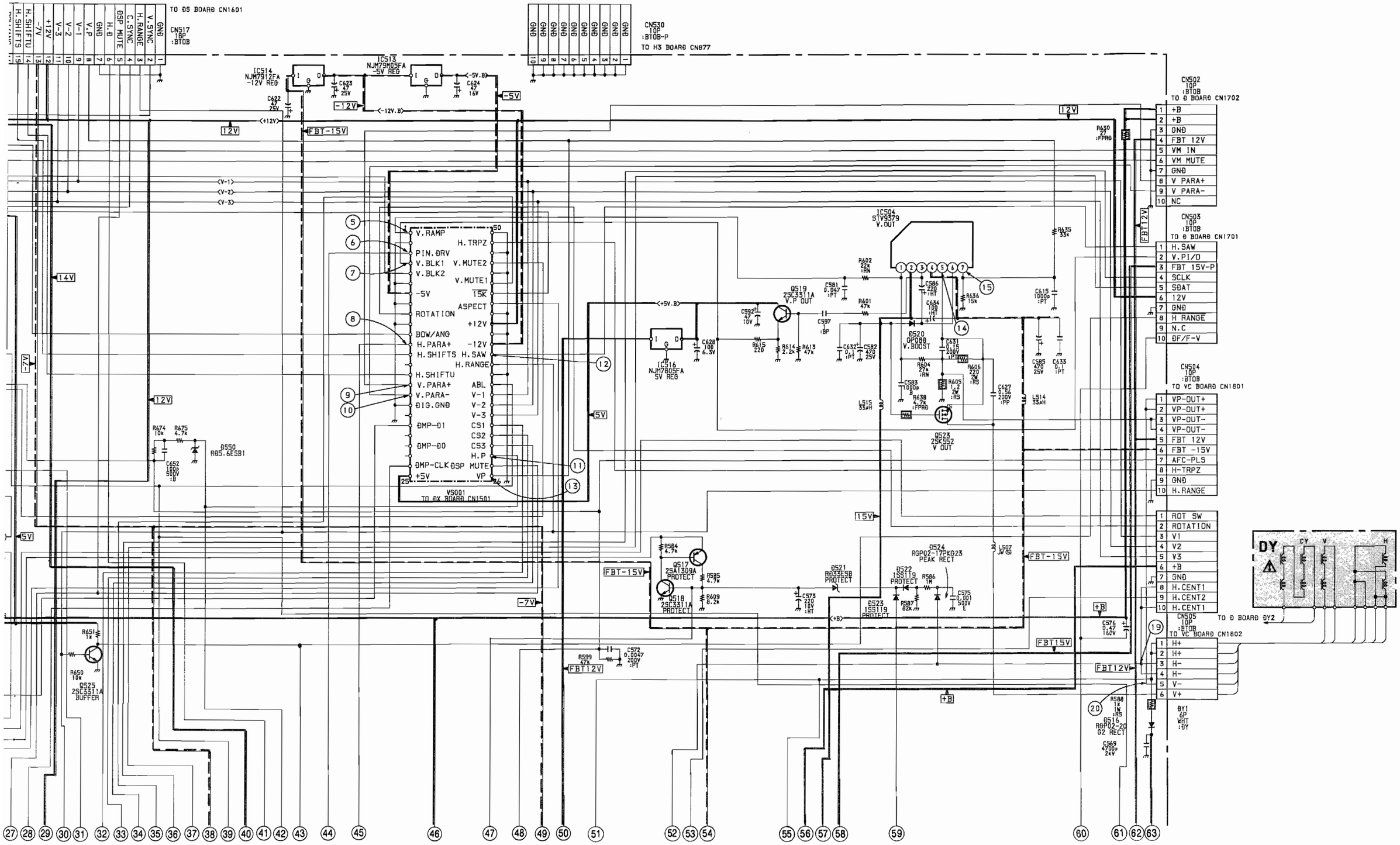
TO Ð5 BOARÐ CN1601
CN517 18P :BTOB
H.SHIFTS
H.SHIFTU
-7V
+12V
V-3
V-2
V-1
V.P
GNÐ
H.Ð
ÐSP MUTE
C.SYNC
H.RANGE
V.SYNC
GNÐ
CN530 10P :BTOB-P
TO H3 BOARÐ CN877
IC514 NJM7912FA -12V REG
IC513 NJM79M05FA -5V REG
C623 47 25V
C624 47 16V
C622 47 25V
-12V
-5V
-5V.B
-12V.B
+12V
12V
FBT-15V
V-1
V-2
V-3
14V
7V
5V
V.RAMP
PIN.ÐRV
V.BLK1
V.BLK2
-5V
ROTATION
BOW/ANG
H.PARA+
H.SHIFTS
H.SHIFTU
V.PARA+
V.PARA-
ÐIG.GNÐ
ÐMP-Ð1
ÐMP-Ð0
ÐMP-CLK
+5V
H.TRPZ
V.MUTE2
V.MUTE1
15K
ASPECT
+12V
-12V
H.SAW
H.RANGE
ABL
V-1
V-2
V-3
CS1
CS2
CS3
H.P
MUTE
VP
ÐSP
VS001 TO Ðx BOARÐ CN1501
R674 10k
R675 4.7k
D550 RD5.6ESB1
C652 1000p 500V :B
R651 1k
R650 10k
Q525 2SC3311A BUFFER
IC516 NJM7805FA 5V REG
C628 100 6.3V
+5V.B
Q519 2SC3311A V.P OUT
C592 47 10V
R615 220
R614 2.2k
R613 47k
C597 1 :BP
R601 47k
C581 0.047 :PT
IC504 STV9379 V.OUT
R602 22k :RN
R635 33k
C586 220 :HT
R636 15k
C634 100 :HT
C615 1000p :PT
Q520 GP08B V.BOOST
C632 0.1 :PT
C582 470 25V
C631 0.15 200V :PT
R604 27k :RN
R606 220 2W :RS
R605 1.2 2W :RS
R638 4.7k :FPRÐ
C583 1000p B
C627 0.56 200V :PP
L515 33µH
L514 33µH
C585 470 25V
C633 0.1 :PT
Q523 2SK552 V OUT
R630 27 :FPRÐ
CN502 10P :BTOB
TO Ð BOARÐ CN1702
1 +B
2 +B
3 GNÐ
4 FBT 12V
5 VM IN
6 VM MUTE
7 GNÐ
8 V PARA+
9 V PARA-
10 NC
CN503 10P :BTOB
TO Ð BOARÐ CN1701
1 H.SAW
2 V.PI/O
3 FBT 15V-P
4 SCLK
5 SÐAT
6 12V
7 GNÐ
8 H RANGE
9 N.C
10 ÐF/F-V
CN504 10P :BTOB
TO VC BOARÐ CN1801
1 VP-OUT+
2 VP-OUT+
3 VP-OUT-
4 VP-OUT-
5 FBT 12V
6 FBT -15V
7 AFC-PLS
8 H-TRPZ
9 GNÐ
10 H.RANGE
1 ROT SW
2 ROTATION
3 V1
4 V2
5 V3
6 +B
7 GNÐ
8 H.CENT1
9 H.CENT2
10 H.CENT1
CN505 10P :BTOB
TO VC BOARÐ CN1802
1 H+
2 H+
3 H-
4 H-
5 V-
6 V+
ÐY1 6P WHT :DY
TO Ð BOARÐ ÐY2
DY
CY
V
H
R584 4.7k
Q517 2SA1309A PROTECT
R585 4.7k
Q518 2SC3311A PROTECT
R609 8.2k
FBT-15V
D521 RD33ESB PROTECT
D522 1SS119 PROTECT
R586 1M
D523 1SS119 PROTECT
R587 82k
D524 RGP02-17PKG23 PEAK RECT
C575 0.001 500V E
L507 3µH
C573 220 16V :HT
C574 0.47 160V
+B
FBT15V
FBT12V
R599 47k
C572 0.0047 200V :PT
R588 1k 1W :RS
D516 RGP02-20 G2 RECT
C569 4700p 2kV
15V
-7V
R635 33k
C615 1000p :PT
C585 470 25V
C633 0.1 :PT
L514 33µH
L515 33µH
R630 27 :FPRÐ
C627 0.56 200V :PP
R638 4.7k :FPRÐ
C583 1000p B
R604 27k :RN
R606 220 2W :RS
R605 1.2 2W :RS
C631 0.15 200V :PT
C632 0.1 :PT
C582 470 25V
R602 22k :RN
C586 220 :HT
C634 100 :HT
R636 15k
C581 0.047 :PT
C597 1 :BP
R601 47k
C592 47 10V
R615 220
R614 2.2k
R613 47k
C628 100 6.3V
R674 10k
R675 4.7k
C652 1000p 500V :B
R651 1k
R650 10k
C599 47k
C572 0.0047 200V :PT
C573 220 16V :HT
C574 0.47 160V
C575 0.001 500V E
R584 4.7k
R585 4.7k
R609 8.2k
R586 1M
R587 82k
R588 1k 1W :RS
C569 4700p 2kV

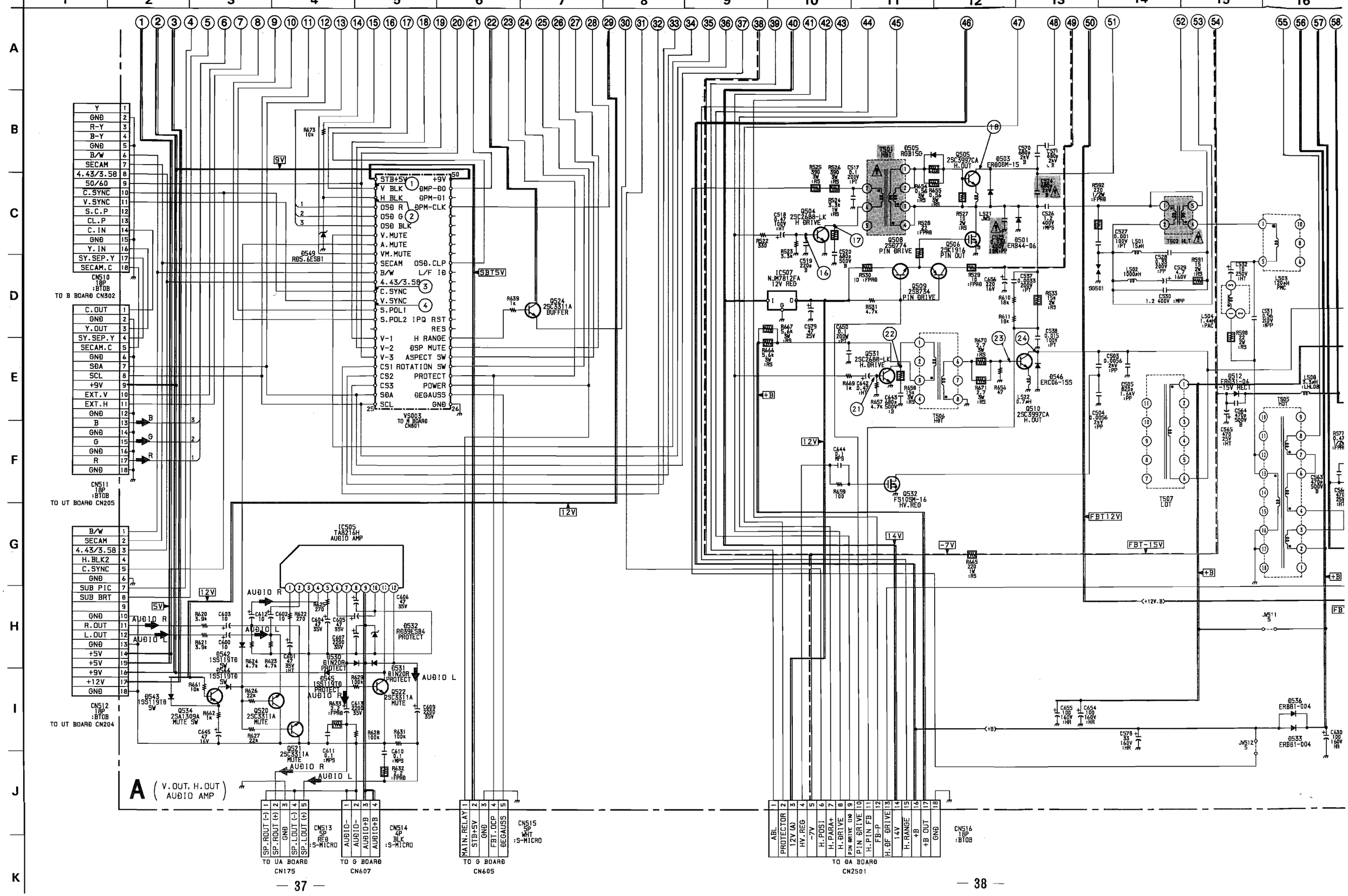

CN510 18P :BTOB TO B BOARD CN302
CN511 18P :BTOB TO UT BOARD CN205
CN512 18P :BTOB TO UT BOARD CN204
VS003 TO M BOARD CN601
IC505 TA8216H AUDIO AMP
IC507 NJM7812FA 12V REG
Q524 2SC3311A BUFFER
Q532 FS10SM-16 HV.REG
Q510 2SC3997CA H.OUT
Q531 2SC2688-LK H.DRIVE
Q509 2SB734 PIN DRIVE
Q508 2SD774 PIN DRIVE
Q506 2SK1916 PIN OUT
Q505 2SC3997CA H.OUT
Q504 2SC2688-LK H DRIVE
Q501 ERB44-06
Q503 ERD08M-15
Q505 RGB15G
Q546 ERC06-15S
T501 HBT
T502 HLT
T506 HBT
T507 LOT
T505 HOT
Q536 ERB81-004
Q533 ERB81-004
A (V.OUT, H.OUT AUDIO AMP)
CN513 5P RED :S-MICRO TO UA BOARD CN175
CN514 4P BLK :S-MICRO TO G BOARD CN607
CN515 5P WHT :S-MICRO TO G BOARD CN605
CN516 18P :BTOB TO DA BOARD CN2501

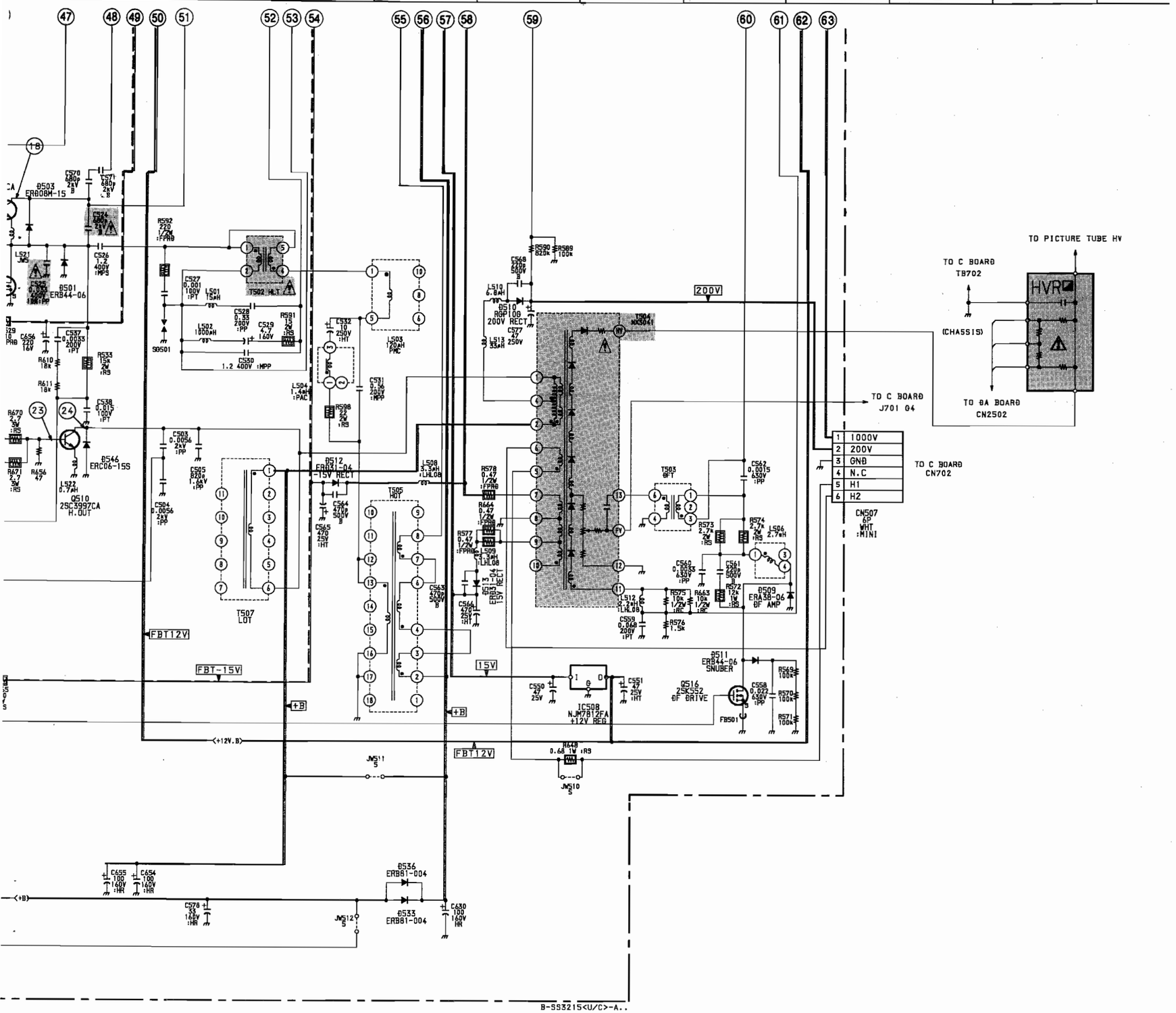

A BOARD * MARK

IC504 ①	0	IC514 I	− 13.8	Q521 B	0.2	㉒		⑰			
②	15.0	G	0	C	0	㉓		⑱	4.8		
③	− 12.6	O	− 12.0	E	0	㉔	4.9	⑲	4.5		
④	− 13.8	IC515 I	8.7	Q522 B	0	㉕	5.0	⑳	0		
⑤	− 0.6	G	0	C	4.9	㉖	0.1	㉑	0		
⑥	14.0	O	5.1	E	0	㉗	0	㉒	0		
⑦	0	IC516 I	12.0	Q523 G	14.1	㉘	0.3	㉓	0		
IC505 ①	1.6	G	0	D	0.6	㉙	0	㉔	4.9		
②	0	O	5.1	S	− 0.6	㉚	0	㉕	4.9		
③	0	IC517 I	16.4	Q524 B	4.9	㉛	0	㉖	0		
④	0	G	0	C	5.0	㉜	0	㉗	0		
⑤	1.6	O	12.1	E	4.2	㉝	4.5	㉘	4.4		
⑥	9.0	Q504 B	− 3.2	Q525 B	0.7	㉞	4.9	㉙	4.2		
⑦	12.4	C	86.1	C	0	㉟	2.2	㉚	0		
⑧	5.1	E	0	E	0	㊱	0	㉛	0		
⑨		Q505 B	12.1	Q531 B	− 2.3	㊲	4.2	㉜	0		
⑩	0	C	116.2	C	62.9	㊳	0	㉝	4.9		
⑪	4.9	E	12.3	E	0	㊴	− 12.0	㉞			
⑫	12.3	Q506 G	8.2	Q532 G	9.4	㊵	0	㉟			
IC506 I	16.4	D	12.2	D	6.4	㊶	12.0	㊱			
G	0	S	0	S	0	㊷	0	㊲			
O	12.0	Q508 B	8.3	Q534 B	12.0	㊸	0	㊳			
IC507 I	16.4	C	12.2	C	− 1.2	㊹	0	㊴			
G	0	E	8.2	E	11.9	㊺	0	㊵			
O	12.2	Q509 B	8.3	VS001 ①	0	㊻	0	㊶	4.9		
IC508 I	14.1	C	− 7.5	②	0	㊼		㊷			
G	0	E	8.2	③	4.0	㊽	0	㊸			
O	12.0	Q510 B	− 0.2	④	0.1	㊾	2.5	㊹			
IC510 I	8.7	C	116.3	⑤	0.1	㊿	0	㊺			
G	0	E	0	⑥	0	VS003 ①	5.0	㊻			
O	5.2	Q516 G	2.8	⑦	− 5.0	②	0.2	㊼	5.0		
IC511 I	16.4	D	54.8	⑧	0	③	0.3	㊽			
G	0	S	0	⑨	2.4	④	0	㊾	4.9		
O	9.3	Q517 B	4.4	⑩	0	⑤	0	㊿	9.0		
IC512 ①	115.0	C	0	⑪	0	⑥	0				
②	114.5	E	4.4	⑫	− 1.6	⑦	0				
③	115.1	Q518 B	0	⑬	2.1	⑧	0				
④	114.6	C	4.4	⑭		⑨	5.0				
⑤	−	E	0	⑮	2.3	⑩	5.1				
⑥	0	Q519 B	− 0.4	⑯	0.7	⑪	0				
⑦	0	C	5.1	⑰	− 0.6	⑫	0				
⑧	4.2	E	0.2	⑱	0	⑬	4.5				
IC513 I	− 12.0	Q520 B	0.2	⑲		⑭	0.1				
G	0	C	0	⑳	4.9	⑮	5.0				
O	− 5.0	E	0	㉑		⑯	5.0				

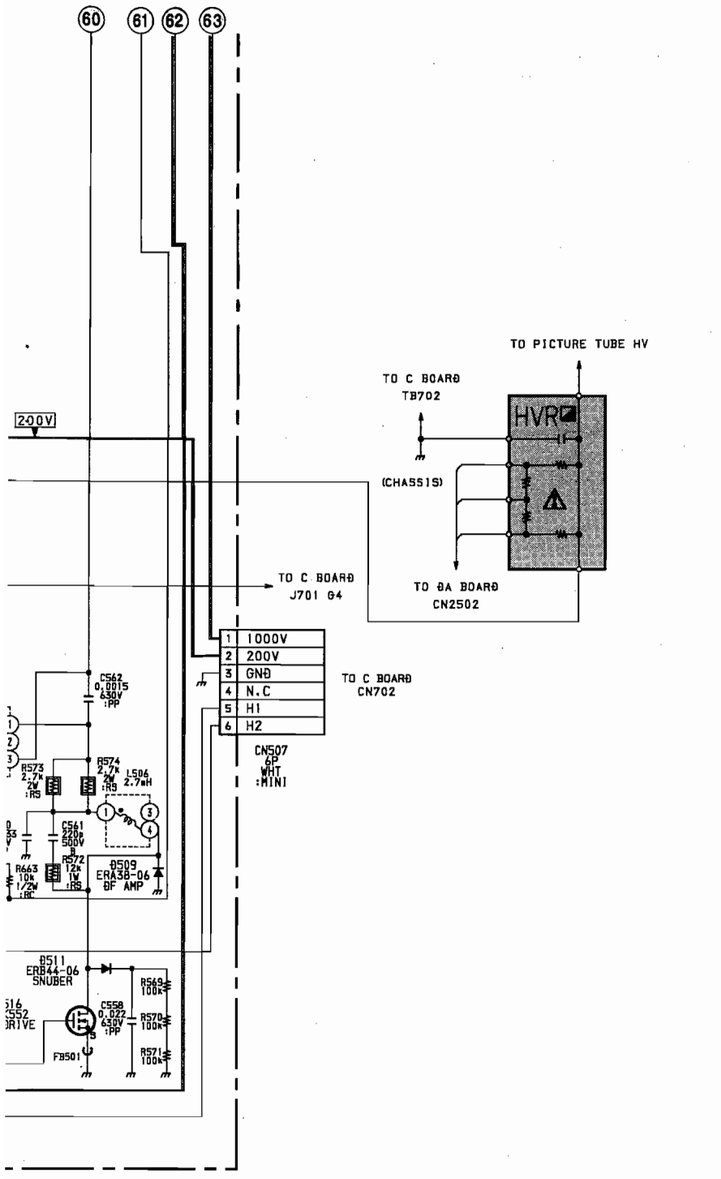

A BOARD * MARK

IC504 ①	0	IC514 I	- 13.8	Q521 B	0.2	㉒		㊲			
②	15.0	G	0	C	0	㉓		㊳	4.8		
③	- 12.6	O	- 12.0	E	0	㉔	4.9	㊴	4.5		
④	- 13.8	IC515 I	8.7	Q522 B	0	㉕	5.0	㊵	0		
⑤	- 0.6	G	0	C	4.9	㉖	0.1	㊶	0		
⑥	14.0	O	5.1	E	0	㉗	0	㊷	0		
⑦	0	IC516 I	12.0	Q523 G	14.1	㉘	0.3	㊸	0		
IC505 ①	1.6	G	0	D	0.6	㉙	0	㊹	4.9		
②	0	O	5.1	S	- 0.6	㉚	0	㊺	4.9		
③	0	IC517 I	16.4	Q524 B	4.9	㉛	0	㊻	0		
④	0	G	0	C	5.0	㉜	0	㊼	0		
⑤	1.6	O	12.1	E	4.2	㉝	4.5	㊽	4.4		
⑥	9.0	Q504 B	- 3.2	Q525 B	0.7	㉞	4.9	㊾	4.2		
⑦	12.4	C	86.1	C	0	㉟	2.2	㊿	0		
⑧	5.1	E	0	E	0	㊱	0	(51)	0		
⑨		Q505 B	12.1	Q531 B	- 2.3	㊲	4.2	(52)	0		
⑩	0	C	116.2	C	62.9	㊳	0	(53)	4.9		
⑪	4.9	E	12.3	E	0	㊴	- 12.0	(54)			
⑫	12.3	Q506 G	8.2	Q532 G	9.4	㊵	0	(55)			
IC506 I	16.4	D	12.2	D	6.4	㊶	12.0	(56)			
G	0	S	0	S	0	㊷	0	(57)			
O	12.0	Q508 B	8.3	Q534 B	12.0	㊸	0	(58)			
IC507 I	16.4	C	12.2	C	- 1.2	㊹	0	(59)			
G	0	E	8.2	E	11.9	㊺	0	(60)			
O	12.2	Q509 B	8.3	VS001 ①	0	㊻	0	(61)	4.9		
IC508 I	14.1	C	- 7.5	②	0	㊼		(62)			
G	0	E	8.2	③	4.0	㊽	0	(63)			
O	12.0	Q510 B	- 0.2	④	0.1	㊾	2.5	(64)			
IC510 I	8.7	C	116.3	⑤	0.1	㊿	0	(65)			
G	0	E	0	⑥	0	VS003 ①	5.0	(66)			
O	5.2	Q516 G	2.8	⑦	- 5.0	②	0.2	(67)	5.0		
IC511 I	16.4	D	54.8	⑧	0	③	0.3	(68)			
G	0	S	0	⑨	2.4	④	0	(69)	4.9		
O	9.3	Q517 B	4.4	⑩	0	⑤	0	(70)	9.0		
IC512 ①	115.0	C	0	⑪	0	⑥	0				
②	114.5	E	4.4	⑫	- 1.6	⑦	0				
③	115.1	Q518 B	0	⑬	2.1	⑧	0				
④	114.6	C	4.4	⑭		⑨	5.0				
⑤	-	E	0	⑮	2.3	⑩	5.1				
⑥	0	Q519 B	- 0.4	⑯	0.7	⑪	0				
⑦	0	C	5.1	⑰	- 0.6	⑫	0				
⑧	4.2	E	0.2	⑱	0	⑬	4.5				
IC513 I	- 12.0	Q520 B	0.2	⑲		⑭	0.1				
G	0	C	0	⑳	4.9	⑮	5.0				
O	- 5.0	E	0	(21)		⑯	5.0				

• A BOARD WAVEFORMS

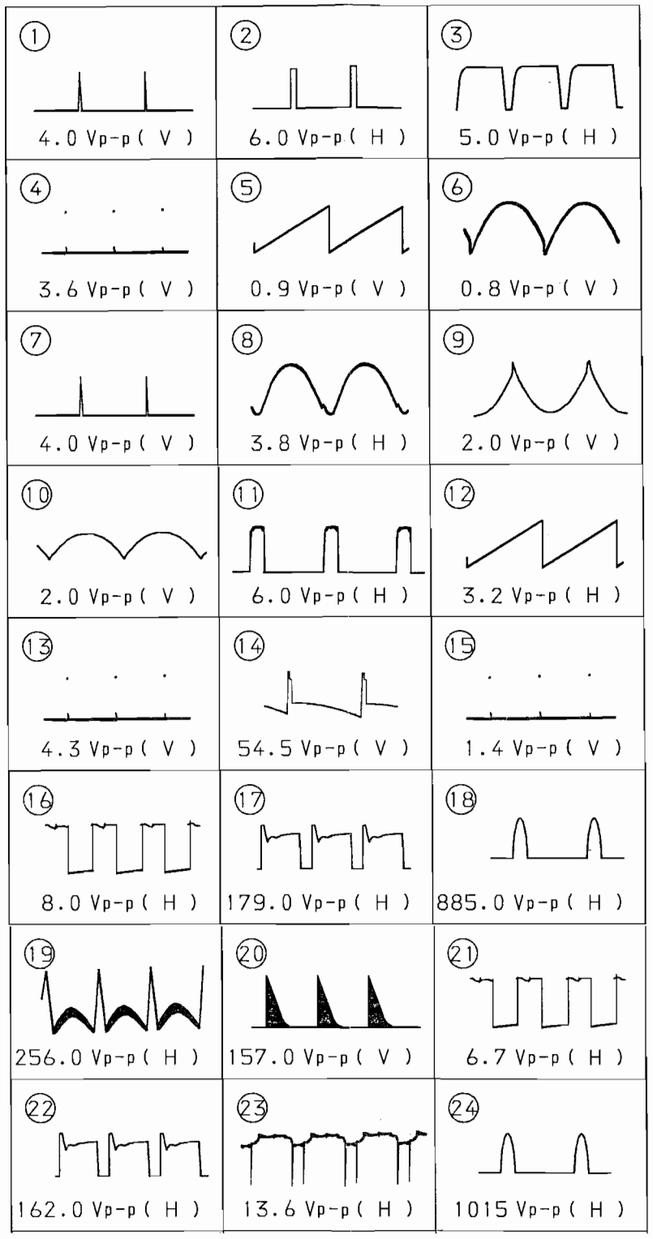

Schematic diagram
← A (2/2) board

Schematic diagrams
G1 H3
V VC boards →

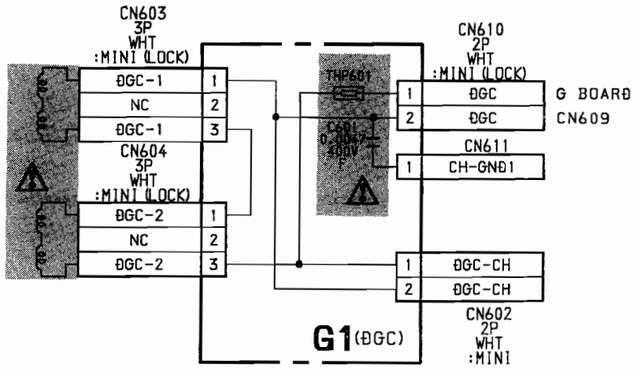

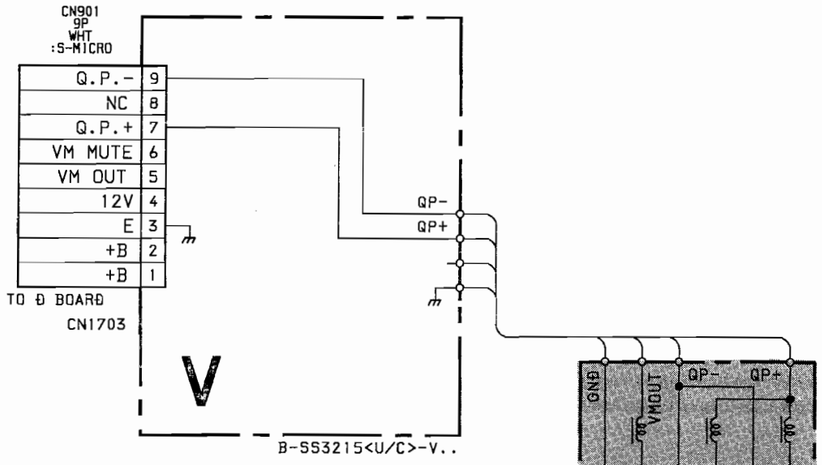

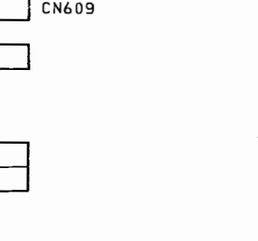

H3 BOARD * MARK

IC871 ①	4.9
②	4.9
③	
④	5.0
⑤	5.0
⑥	5.0
⑦	2.6
⑧	5.0
⑨	5.0
⑩	
⑪	5.0
⑫	4.9
⑬	4.9
⑭	0
⑮	0
⑯	
⑰	2.6
⑱	2.6
⑲	4.8
⑳	4.8
㉑	4.8
㉒	4.7
㉓	4.9
㉔	
㉕	5.0
㉖	2.3
㉗	2.0
㉘	5.0
Q871 B	0
C	4.9
E	5.0
Q872 B	8.3
C	5.7
E	8.6
Q873 B	8.3
C	5.3
E	8.6
Q874 B	2.6
C	2.5
E	0
Q875 B	2.5
C	4.9
E	0
Q876 B	2.6
C	2.5
E	0
Q877 B	2.5
C	4.9
E	0
Q878 B	2.6
C	
E	5.0

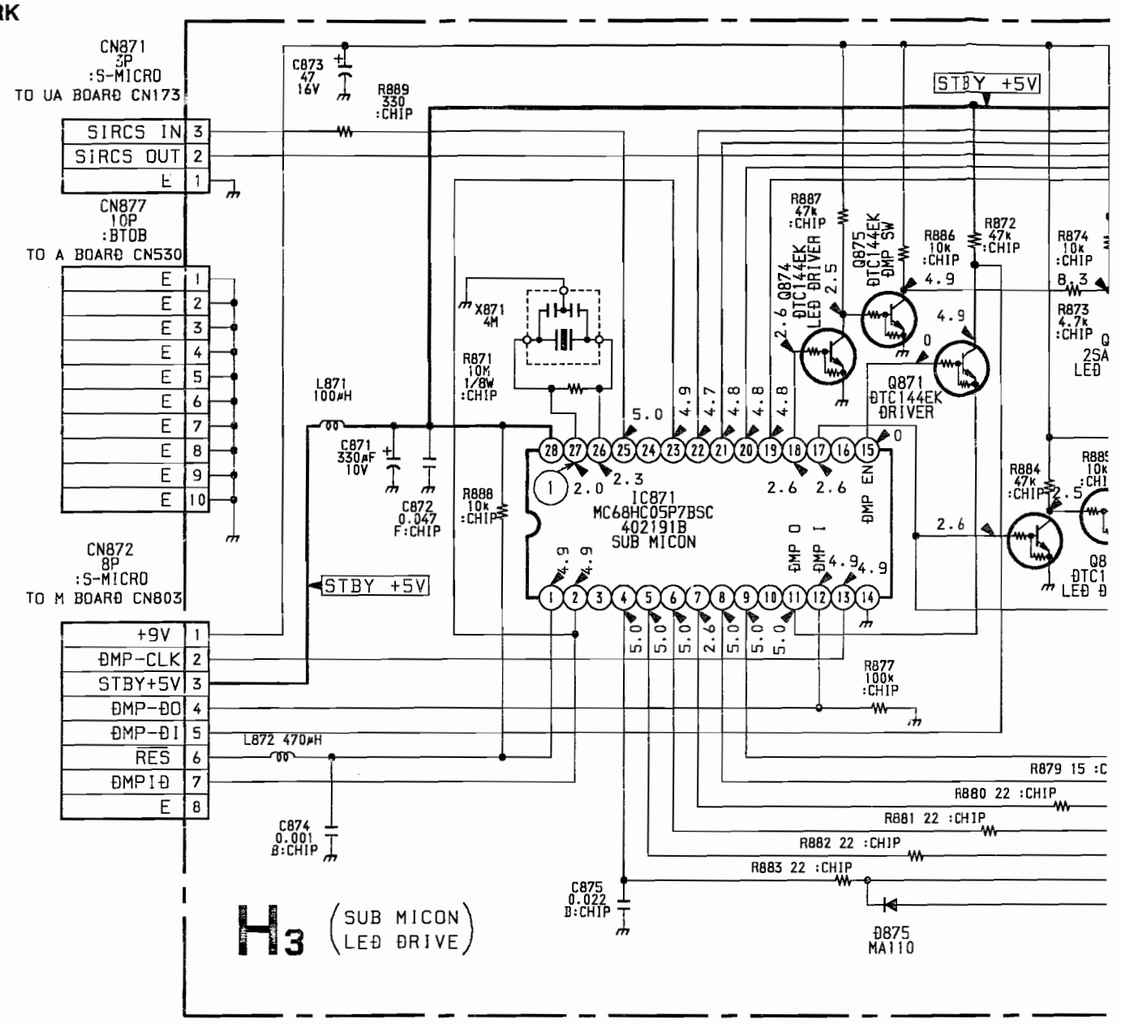

• H3 BOARD WAVEFORMS

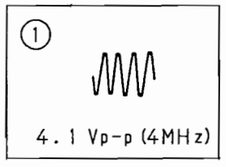

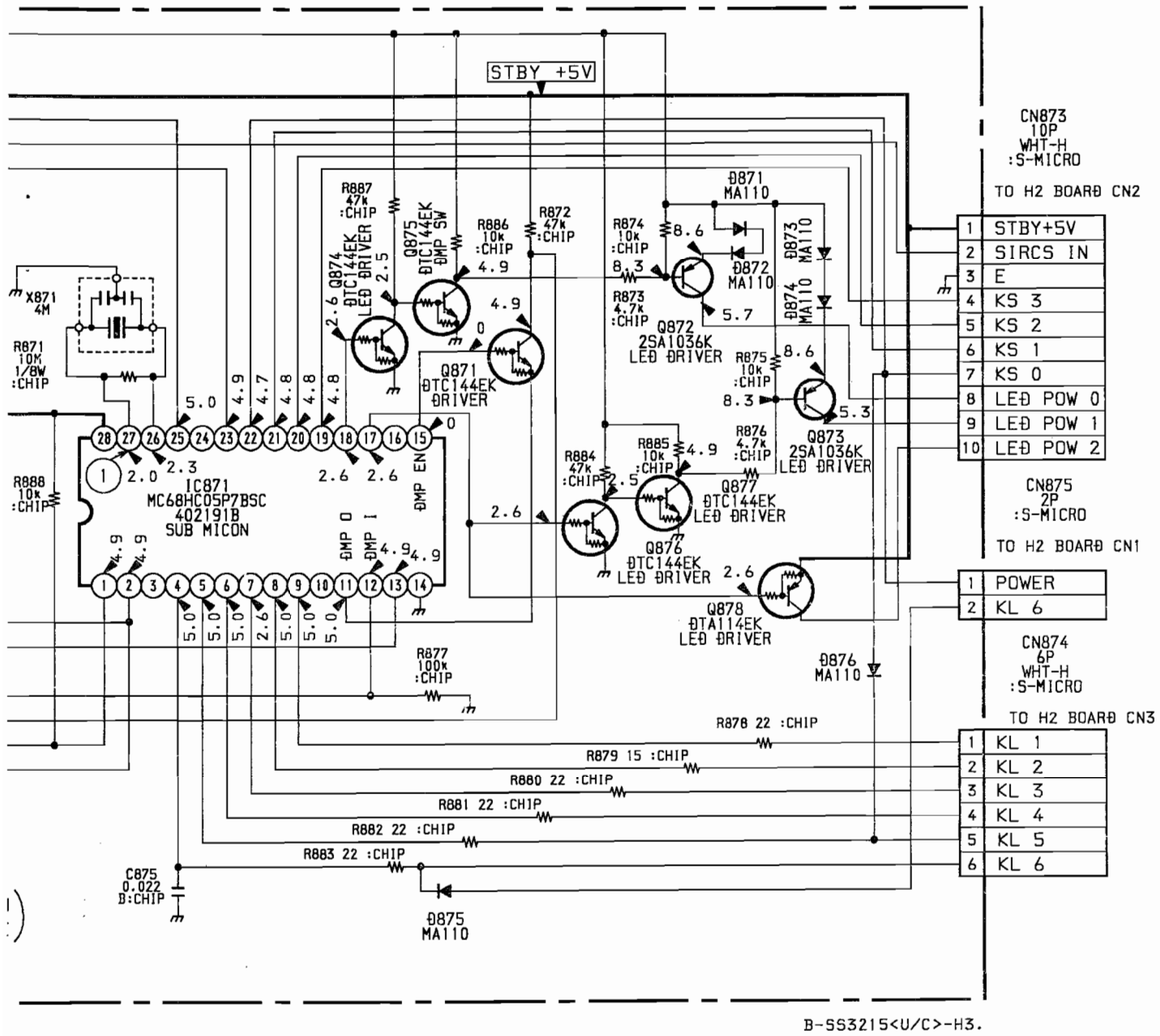

B-SS3215<U/C>-H3.

VC BOARD * MARK

IC1801 ①	11.9	Q1803 B	0
G	0	C	11.8
O	5.1	E	0
IC1802 ①	2.5	Q1804 B	- 0.5
②	2.5	C	- 6.8
③	2.5	E	- 0.4
④	- 11.7	Q1805 B	- 0.5
⑤	0	C	0
⑥	0	E	- 0.4
⑦	0	Q1806 B	- 0.4
⑧	12.0	C	- 4.1
IC1803 ①	0	E	0
②	4.0	Q1807 B	0.1
③	5.0	C	- 11.7
④		E	0.1
⑤	1.8	Q1808 B	0.1
⑥	2.7	C	11.3
⑦	- 0.3	E	0.1
⑧	0	Q1809 B	0.7
⑨	2.7	C	0.2
⑩	5.0	E	0.7
⑪	5.0	Q1810 B	0.7
⑫	1.6	C	6.1
⑬	2.7	E	0.7
⑭	2.6	Q1811 G	0.7
⑮	- 0.3	D	3.8
⑯	5.1	S	0.2
IC1804 ①	- 13.7	Q1850 B	- 1.2
G	0	C	12.0
O	- 11.7	E	- 0.7
IC1850 ①	10.7	Q1851 B	- 1.2
②	0	C	- 11.6
③	1.8	E	- 0.7
④	- 12.0	Q1852 B	5.4
⑤	1.8	C	- 2.8
⑥	1.8	E	0
⑦	- 1.2	Q1853 B	0
⑧	12.0	C	0.4
Q1801 B		E	0
C	4.0		
E	0		
Q1802 B	0		
C	10.7		
E	0		

• VC BOARD WAVEFORMS

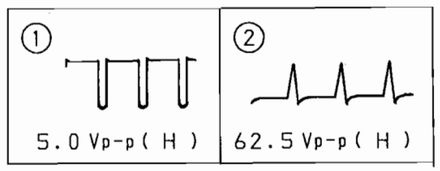

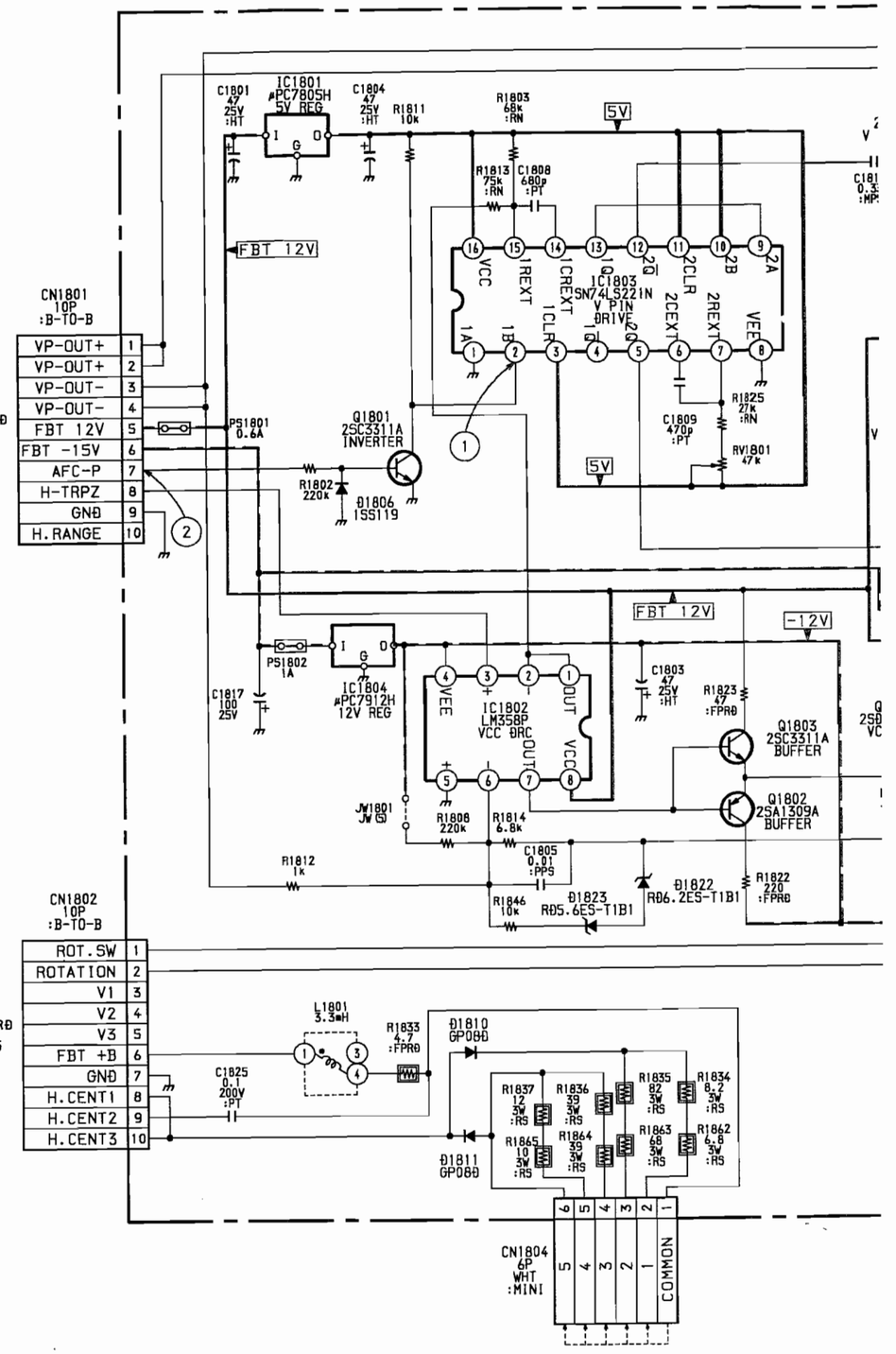

VC BOARD * MARK

IC1801 ①	11.9
②	0
③	5.1
IC1802 ①	2.5
②	2.5
③	2.5
④	- 11.7
⑤	0
⑥	0
⑦	0
⑧	12.0
IC1803 ①	0
②	4.0
③	5.0
④	
⑤	1.8
⑥	2.7
⑦	- 0.3
⑧	0
⑨	2.7
⑩	5.0
⑪	5.0
⑫	1.6
⑬	2.7
⑭	2.6
⑮	- 0.3
⑯	5.1
IC1804 ①	- 13.7
②	0
③	- 11.7
IC1850 ①	10.7
②	0
③	1.8
④	- 12.0
⑤	1.8
⑥	1.8
⑦	- 1.2
⑧	12.0
Q1801 B	
C	4.0
E	0
Q1802 B	0
C	10.7
E	0

Q1803 B	0
C	11.8
E	0
Q1804 B	- 0.5
C	- 6.8
E	- 0.4
Q1805 B	- 0.5
C	0
E	- 0.4
Q1806 B	- 0.4
C	- 4.1
E	0
Q1807 B	0.1
C	- 11.7
E	0.1
Q1808 B	0.1
C	11.3
E	0.1
Q1809 B	0.7
C	0.2
E	0.7
Q1810 B	0.7
C	6.1
E	0.7
Q1811 G	0.7
D	3.8
S	0.2
Q1850 B	- 1.2
C	12.0
E	- 0.7
Q1851 B	- 1.2
C	- 11.6
E	- 0.7
Q1852 B	5.4
C	- 2.8
E	0
Q1853 B	0
C	0.4
E	0

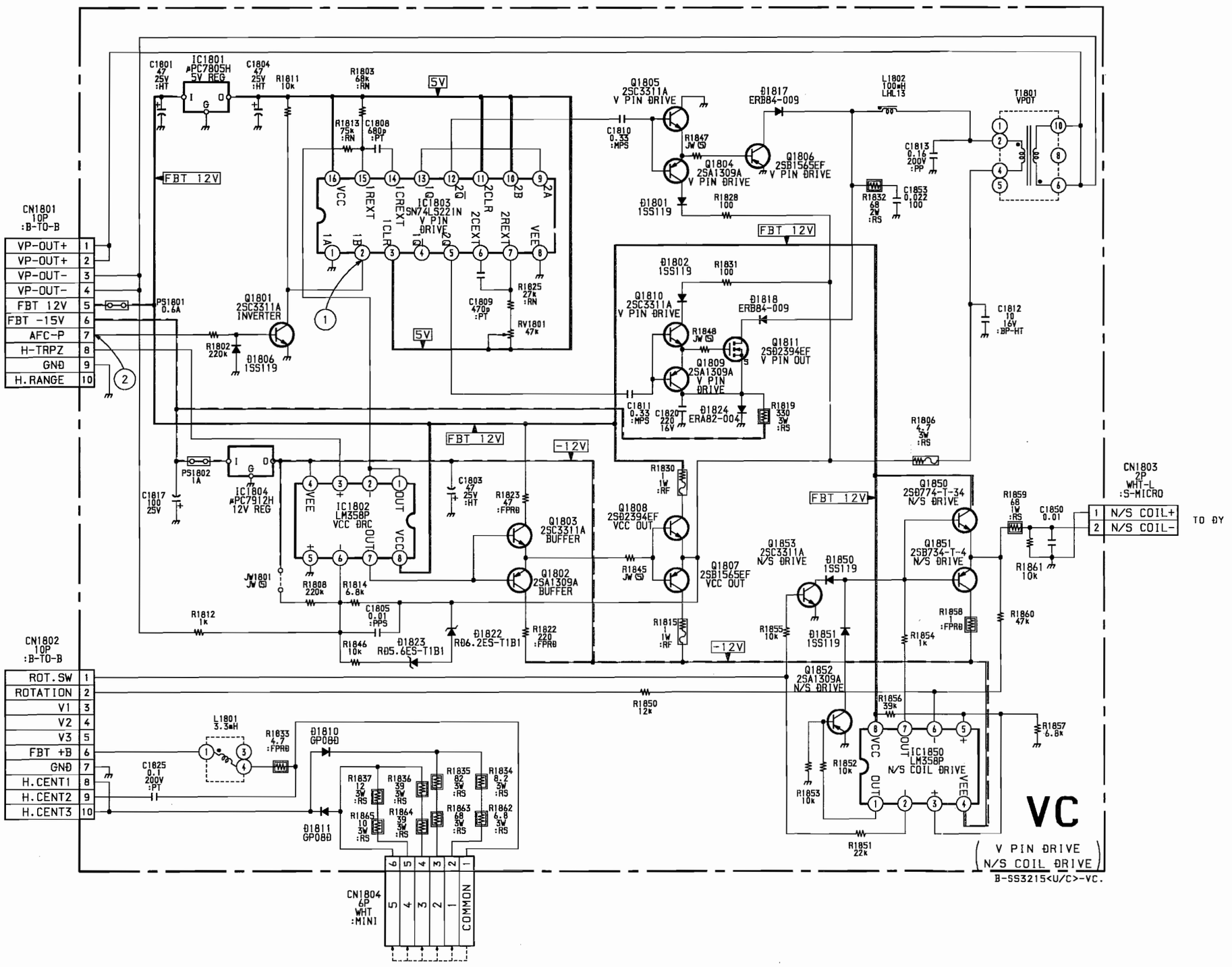

• VC BOARD WAVEFORMS

①	②
5.0 Vp-p (H)	62.5 Vp-p (H)

H3 [SUB MICON, LED DRIVE] **V** **G1** [DGC] **VC** [V PIN DRIVE, N/S COIL DRIVE]

– H3 BOARD – 〈Component Side〉

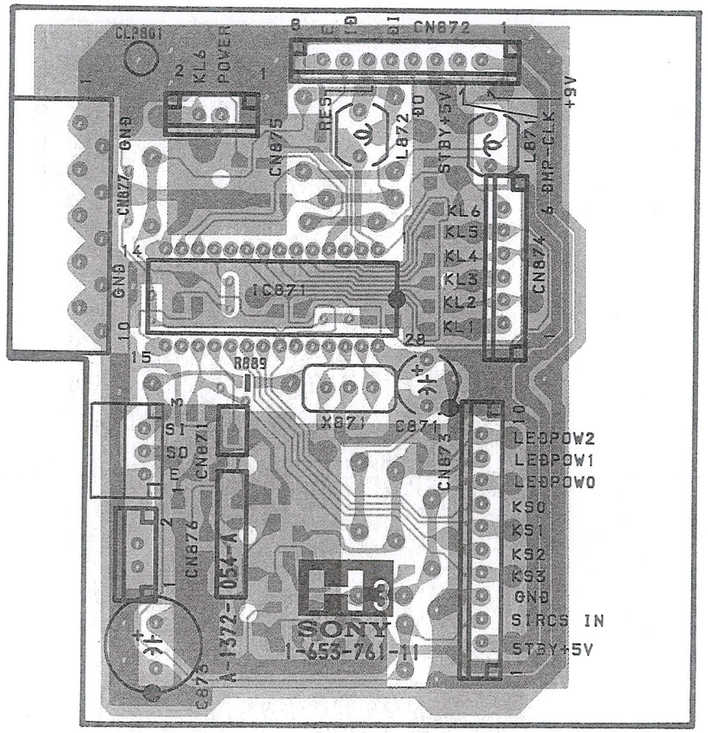

〈Conductor Side〉

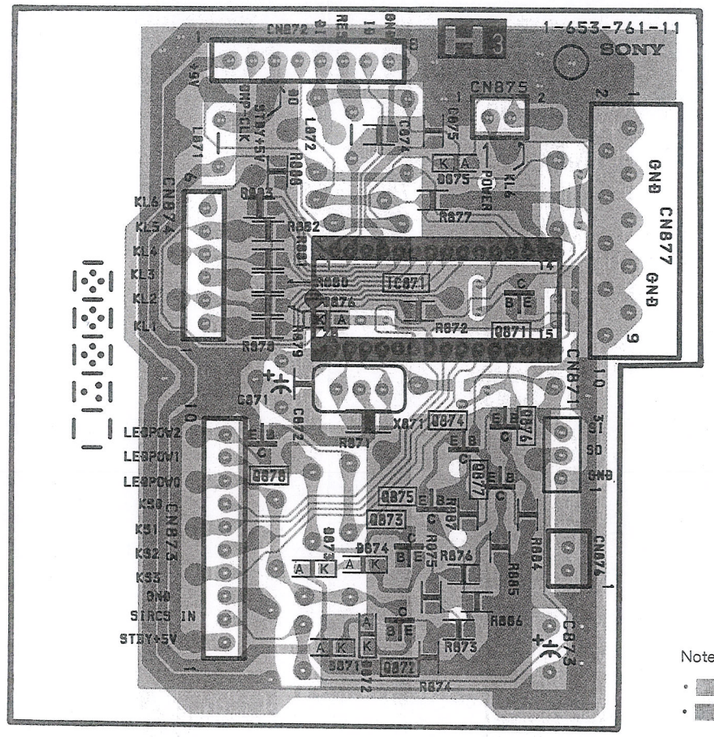

– VC BOARD –

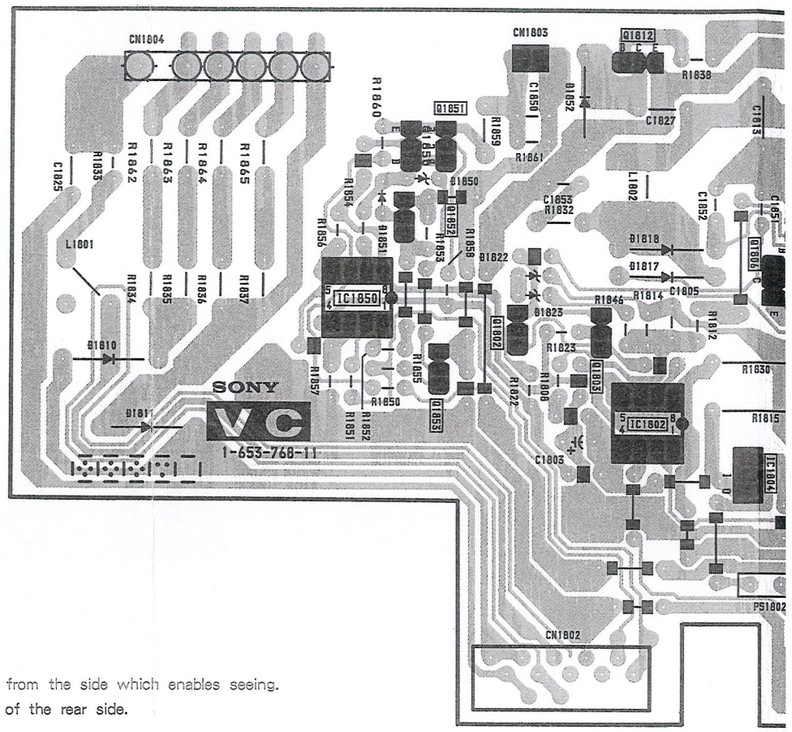

Note :

- ▨ : Pattern from the side which enables seeing.
- ▨ : Pattern of the rear side.

– V BOARD –

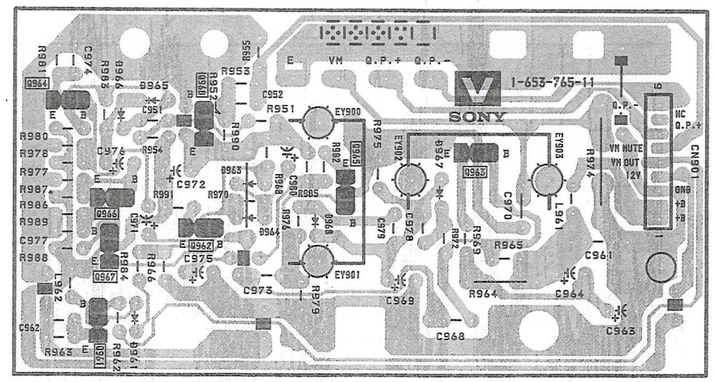

– G1 BOARD – (US, Canadian Model)

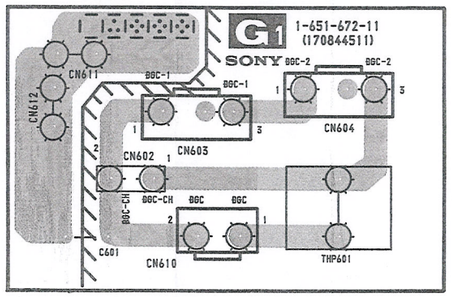

– G1 BOARD – (AEP Model)

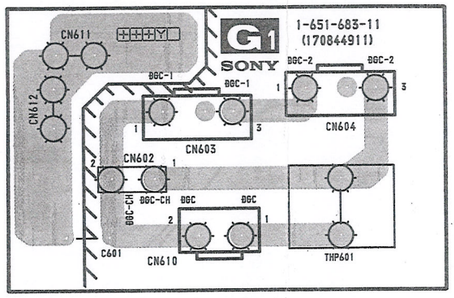

e)

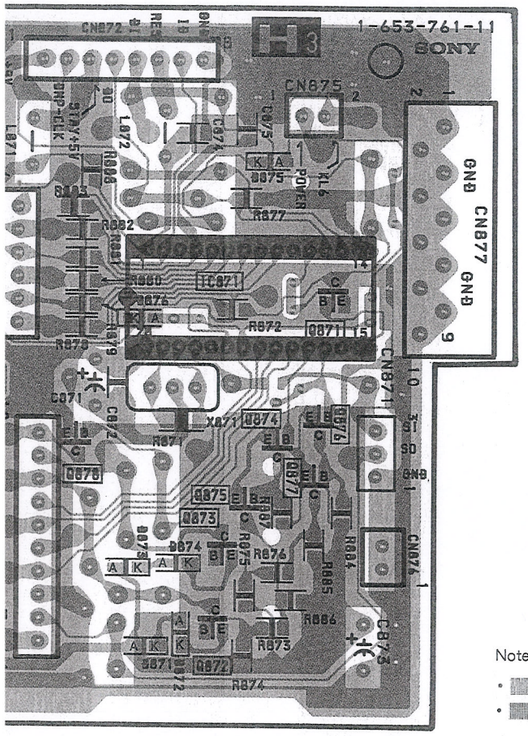
1-653-761-11
SONY
CN872
CN875
CN877
GND
CN876
CN871
IC871
Q871
Q872
Q873
Q874
Q875
Q876
Q877
L871
L872
L873
L874
L875
L876
L877
C871
C872
C873
C874
C875
C876
C877
C878
C879
C880
C881
C882
C883
C884
C885
C886
R871
R872
R873
R874
R875
R876
R877
R878
R879
R880
R881
R882
R883
R884
R885
R886
R887
R888
X871
D871
D872
D873
D874
D875
D876
D877
D878
D879
D880
D881
D882
D883
D884
D885
D886
D887
D888
D889
D890
D891
D892
D893
D894
D895
D896
D897
D898
D899
D8100
D8101
D8102
D8103
D8104
D8105
D8106
D8107
D8108
D8109
D8110

G [AC IN, POWER SUPPLY]

– G BOARD – (US, Canadian Model)

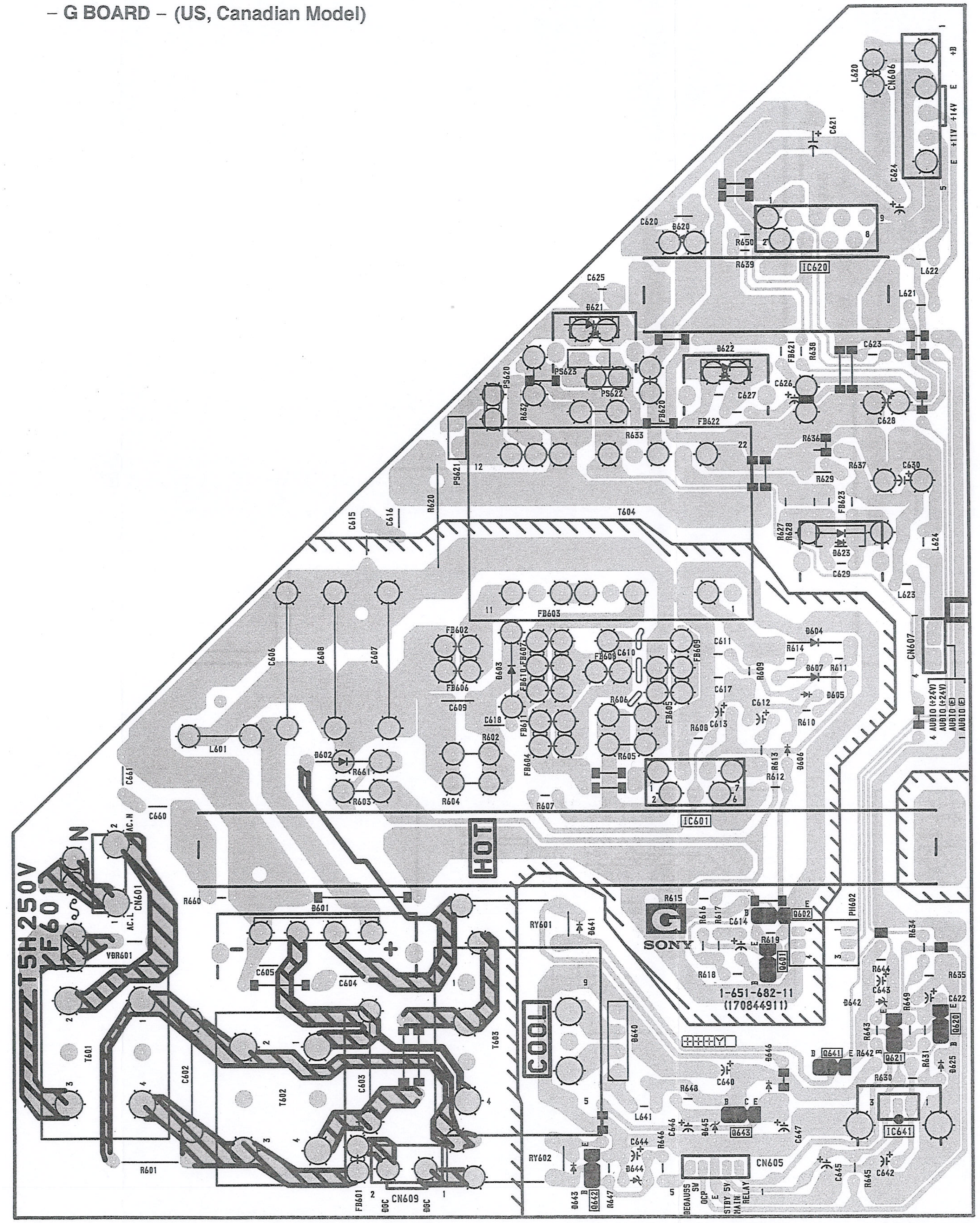

– G BOARD – (A

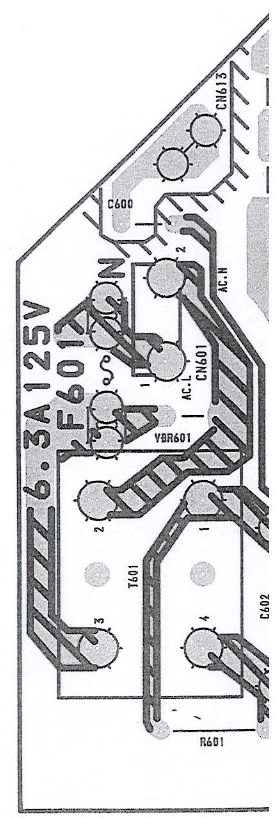

– G BOARD – (US, Canadian Model)

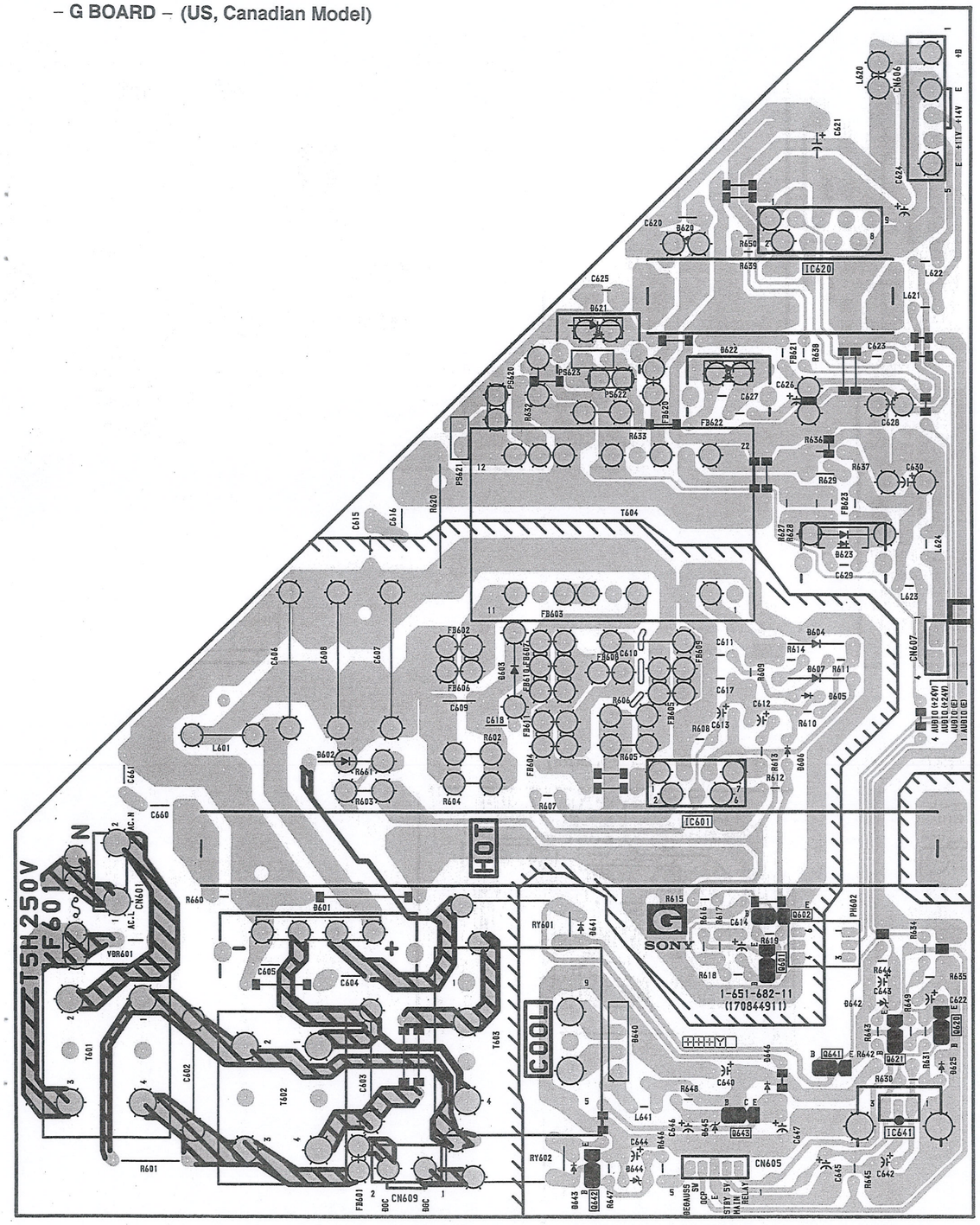

– G BOARD – (AEP Model)

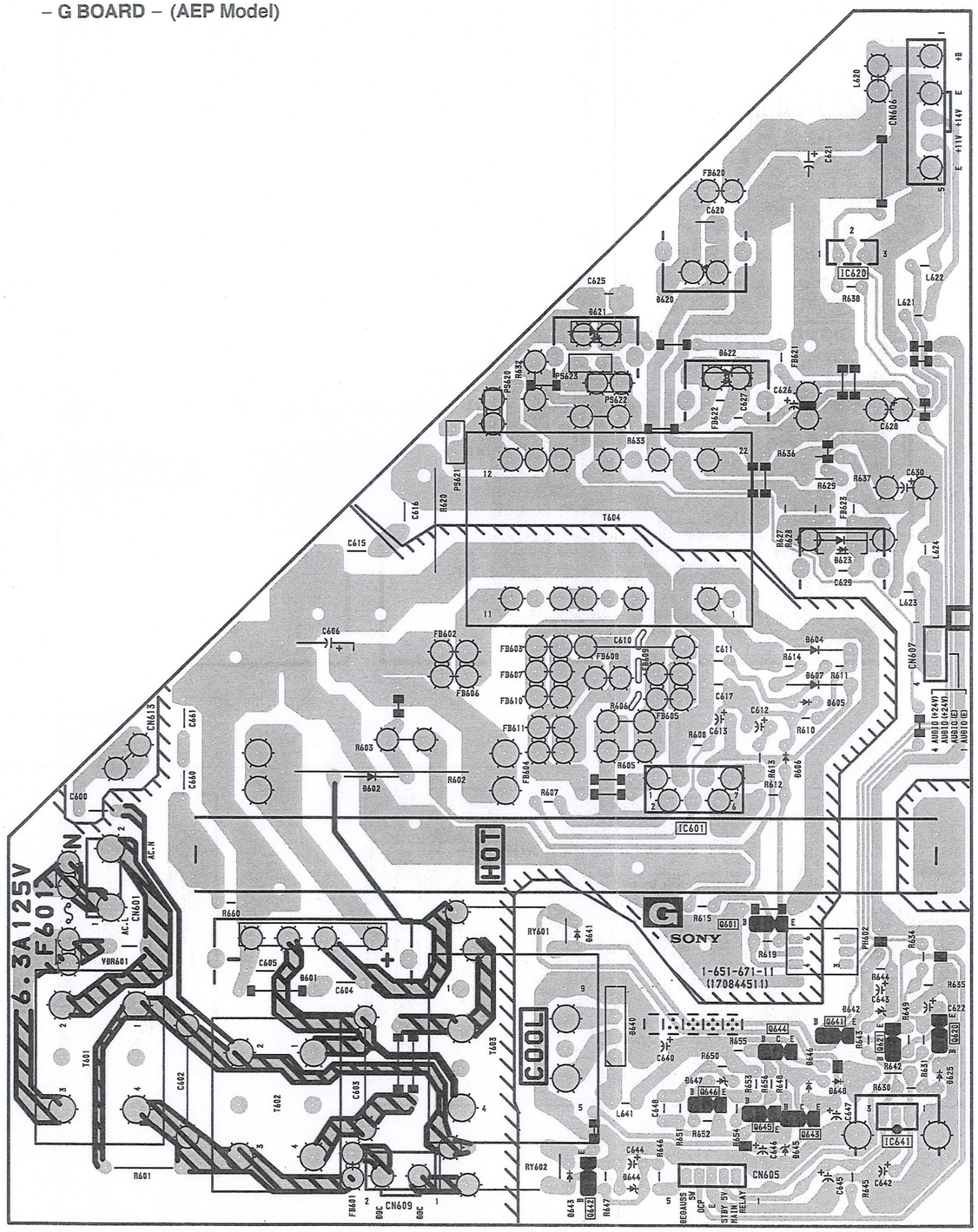

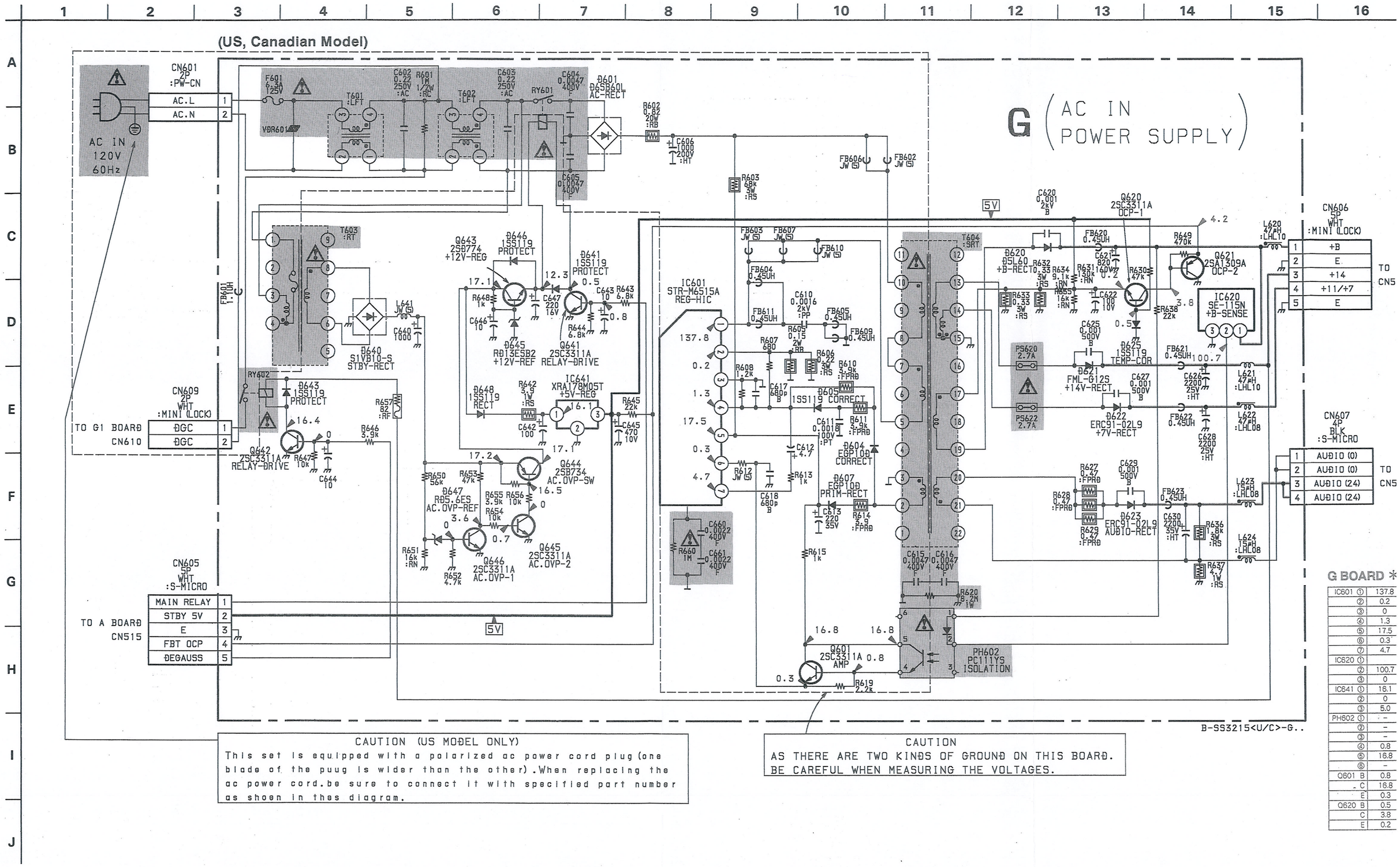

CAUTION (US MODEL ONLY)
This set is equipped with a polarized ac power cord plug (one blade of the puug is wider than the other). When replacing the ac power cord, be sure to connect it with specified part number as shoen in thes diagram.

CAUTION
AS THERE ARE TWO KINDS OF GROUND ON THIS BOARD. BE CAREFUL WHEN MEASURING THE VOLTAGES.

G BOARD *

IC601	①	137.8
	②	0.2
	③	0
	④	1.3
	⑤	17.5
	⑥	0.3
	⑦	4.7
IC620	①	
	②	100.7
	③	0
IC641	①	16.1
	②	0
	③	5.0
PH602	①	-
	②	-
	③	-
	④	0.8
	⑤	16.8
	⑥	-
Q601	B	0.8
	C	16.8
	E	0.3
Q620	B	0.5
	C	3.8
	E	0.2

G (AC IN POWER SUPPLY)

(AEP Model)

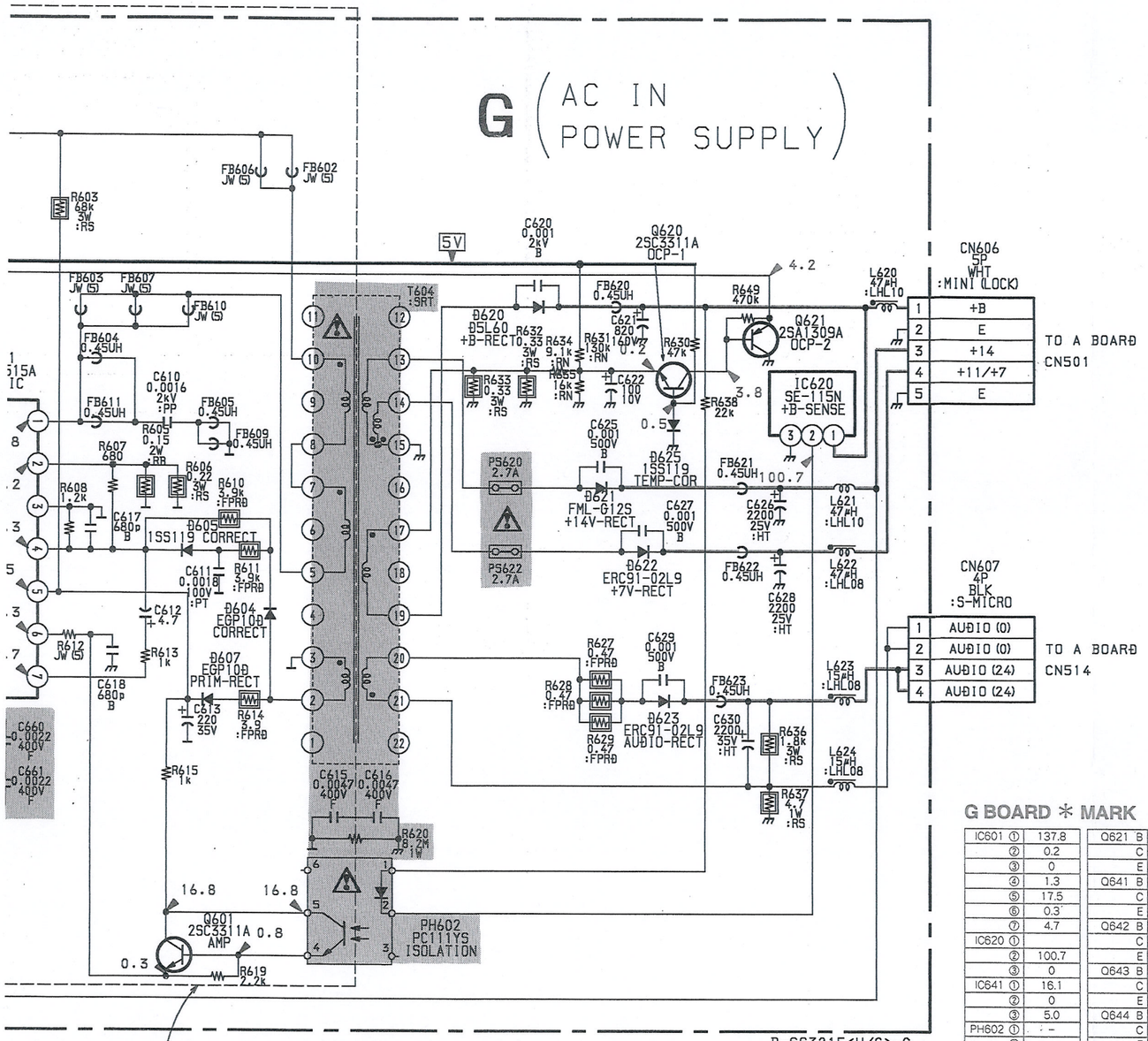

G BOARD * MARK

IC601 ①	137.8	Q621 B	3.8
②	0.2	C	0
③	0	E	4.2
④	1.3	Q641 B	0.8
⑤	17.5	C	0.5
⑥	0.3	E	0
⑦	4.7	Q642 B	0
IC620 ①		C	16.4
②	100.7	E	0
③	0	Q643 B	
IC641 ①	16.1	C	17.1
②	0	E	12.3
③	5.0	Q644 B	16.5
PH602 ①	–	C	17.1
②	–	E	17.2
③	–	Q645 B	0.7
④	0.8	C	0
⑤	16.8	E	0
⑥	–	Q646 B	0
Q601 B	0.8	C	3.6
C	16.8	E	0
E	0.3		
Q620 B	0.5		
C	3.8		
E	0.2		

CAUTION
AS THERE ARE TWO KINDS OF GROUND ON THIS BOARD.
BE CAREFUL WHEN MEASURING THE VOLTAGES.

B-SS3215<U/C>-G..

AS THERE
BE CAREF

(AEP Model)

G (AC IN POWER SUPPLY)

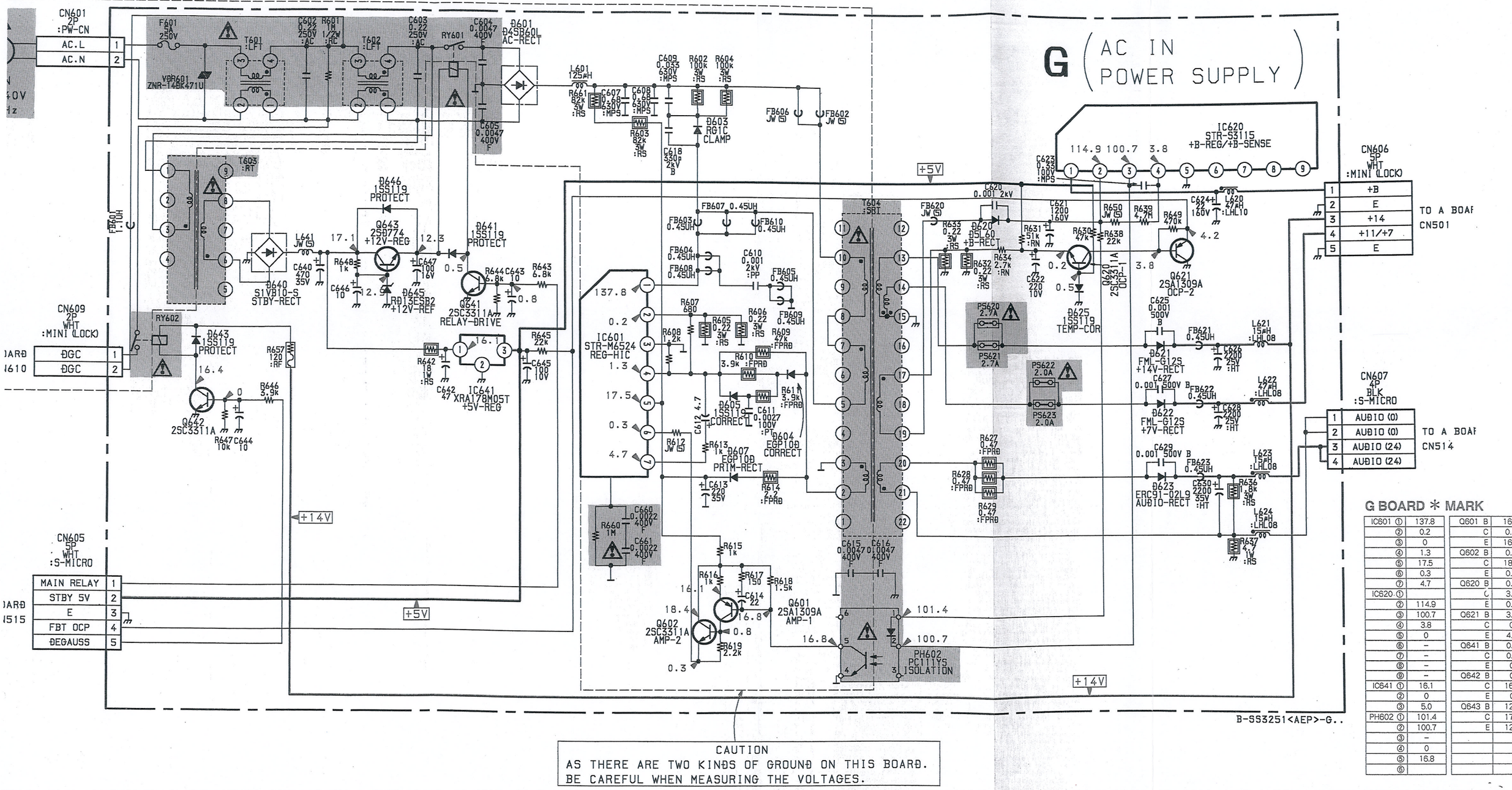

G BOARD * MARK

IC601 ①	137.8	Q601 B	16.8
②	0.2	C	0.8
③	0	E	16.1
④	1.3	Q602 B	0.8
⑤	17.5	C	18.4
⑥	0.3	E	0.3
⑦	4.7	Q620 B	0.5
IC620 ①		C	3.8
②	114.9	E	0.2
③	100.7	Q621 B	3.8
④	3.8	C	0
⑤	0	E	4.2
⑥	–	Q641 B	0.8
⑦	–	C	0.5
⑧	–	E	0
⑨	–	Q642 B	0
IC641 ①	16.1	C	16.4
②	0	E	0
③	5.0	Q643 B	12.9
PH602 ①	101.4	C	17.1
②	100.7	E	12.3
③	–		
④	0		
⑤	16.8		
⑥			

CAUTION
AS THERE ARE TWO KINDS OF GROUND ON THIS BOARD.
BE CAREFUL WHEN MEASURING THE VOLTAGES.

B-SS3251<AEP>-G..

B [RGB DECODER, D/A CONVERTER]

– **B BOARD** – ⟨Component Side⟩

B BOARD
(Component Side)

IC	
IC307	D – 3
IC308	F – 1
IC311	D – 2
IC312	B – 5
IC320	D – 1
IC1402	E – 1

TRANSISTOR	
Q355	A – 3
Q1415	A – 3

DIODE	
D315	C – 2
D316	D – 1
D317	B – 5
D318	A – 4
D319	A – 4
D320	A – 5
D321	A – 5
D322	A – 4
D323	A – 5
D324	A – 6
D325	A – 6
D326	A – 6
D327	A – 6
D328	A – 6
D329	A – 6
D1403	E – 1

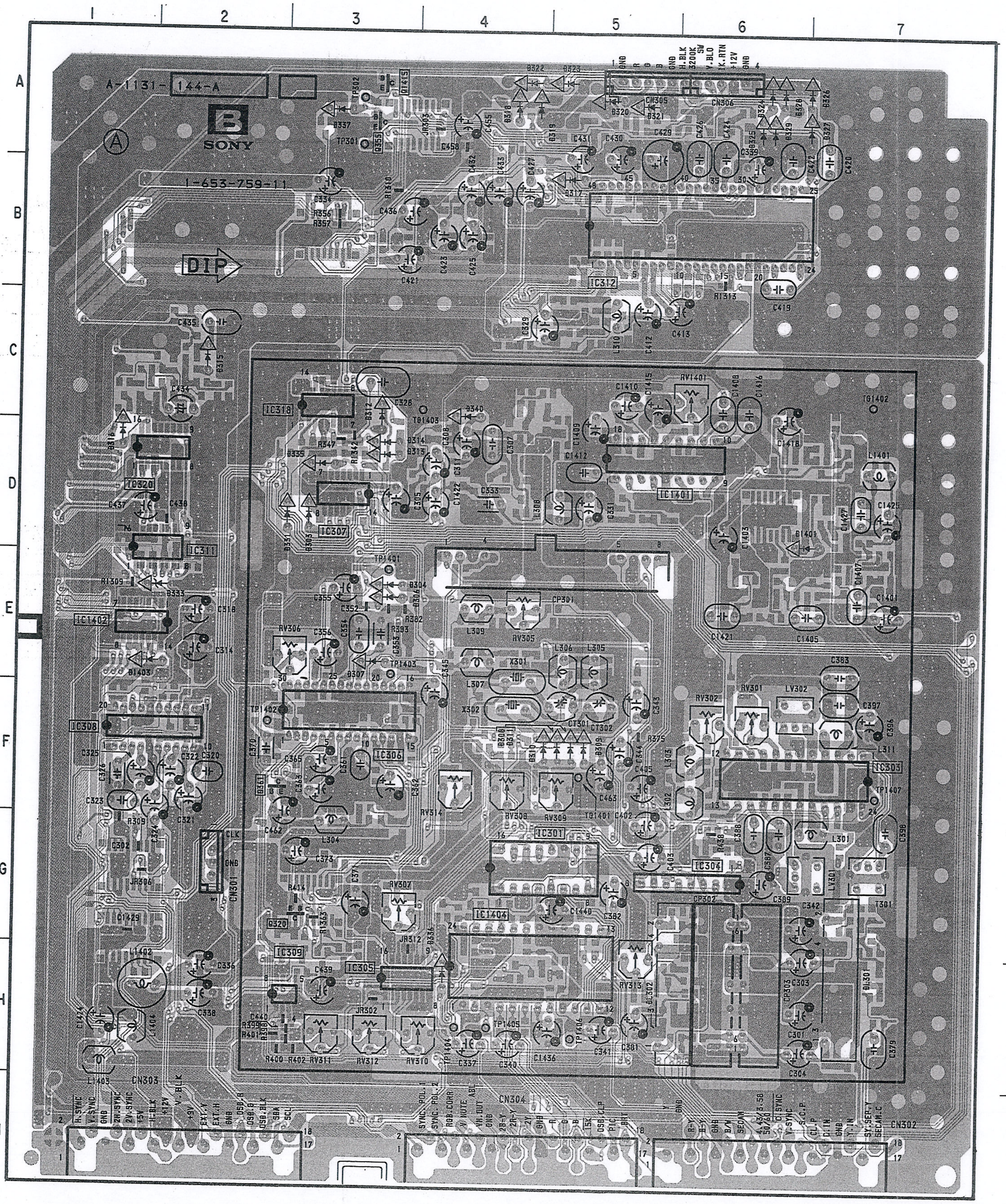

⟨Conductor Side⟩

Note :

- : Pattern from the side which enables se
- : Pattern of the rear side.

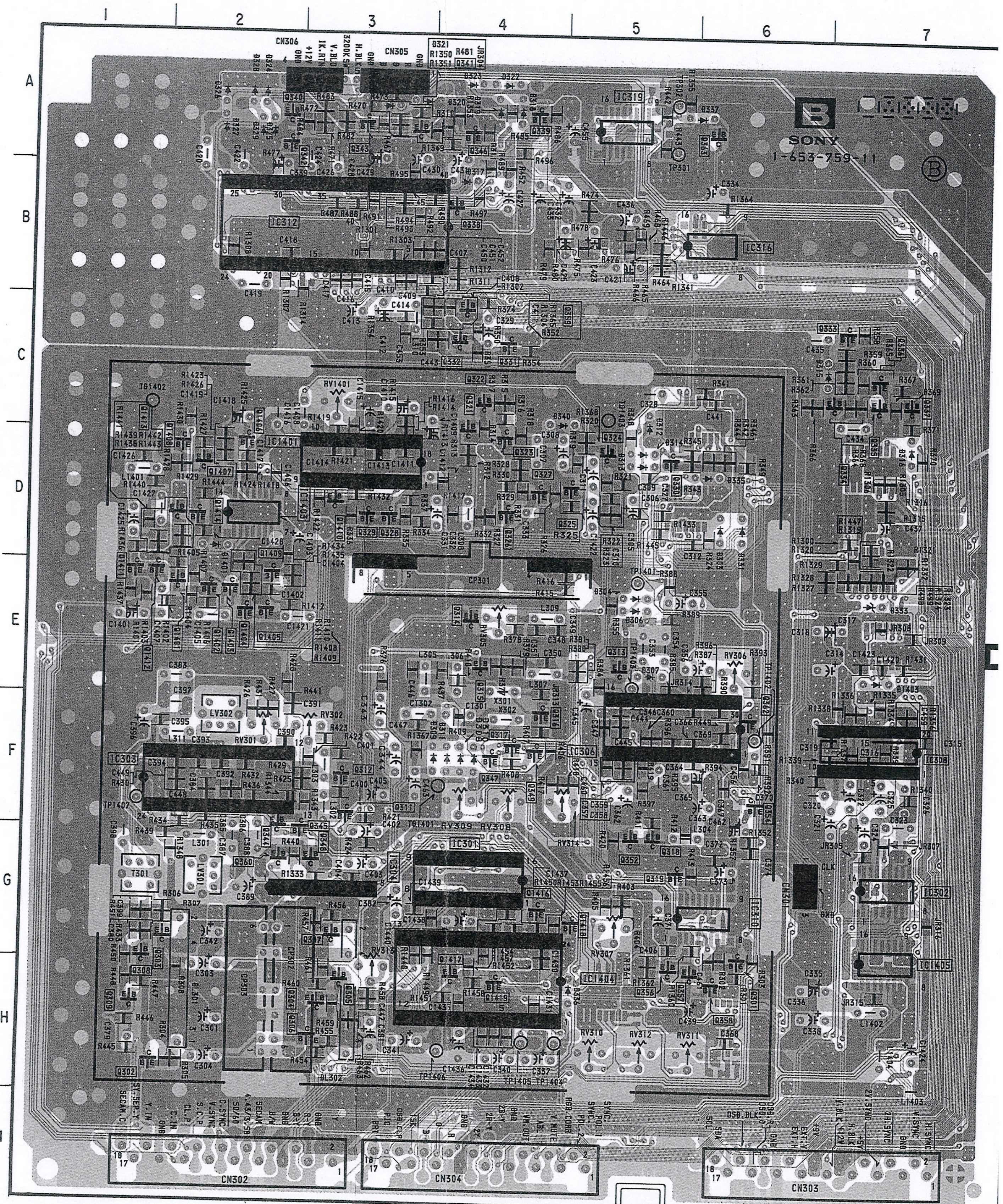

Note :

- : Pattern from the side which enables seeing.
- : Pattern of the rear side.

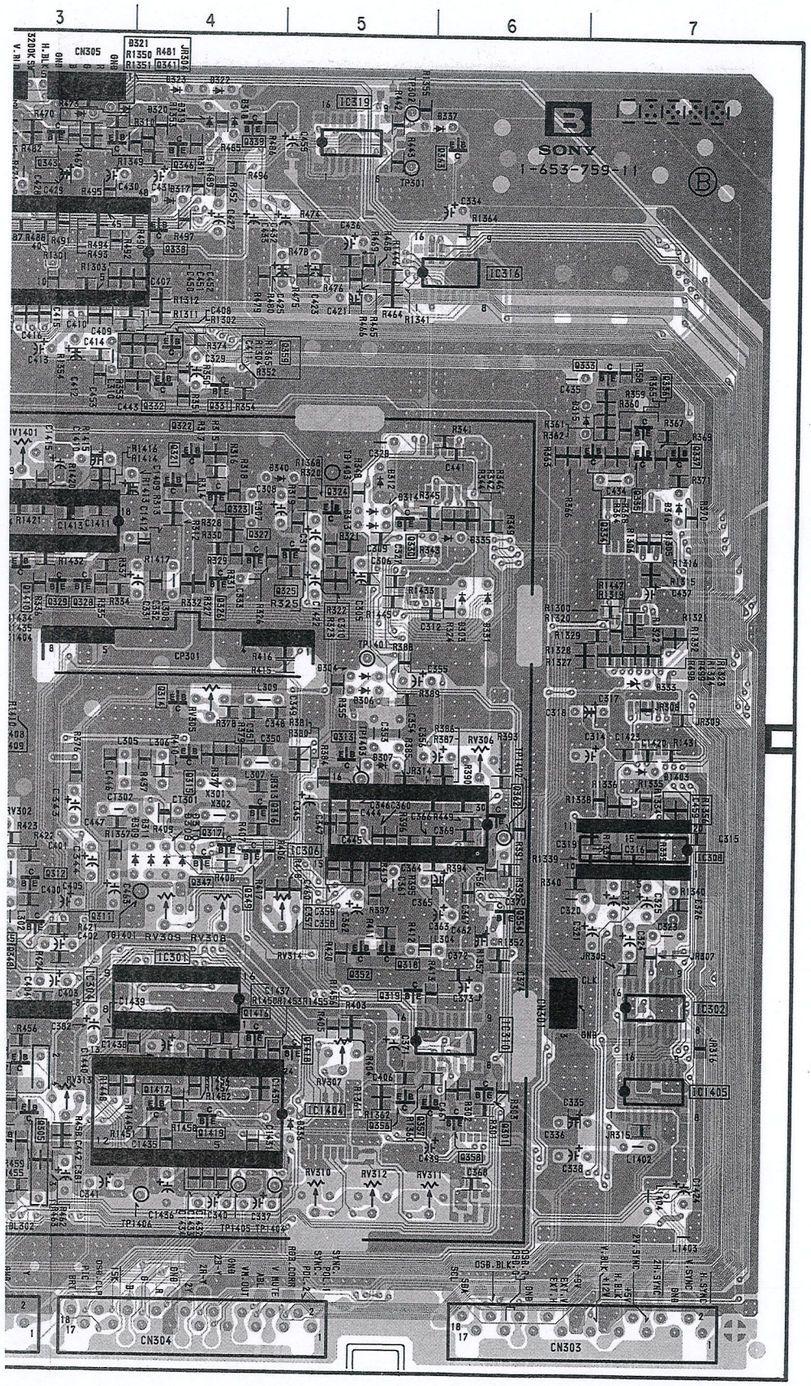

B BOARD (Conductor Side)

IC	
IC308	F – 7
IC312	B – 3
IC316	B – 6
IC319	A – 5

TRANSISTOR	
Q333	C – 7
Q334	C – 7
Q335	C – 7
Q336	C – 7
Q337	C – 7
Q338	B – 4
Q339	A – 4
Q340	A – 2
Q341	A – 3
Q342	A – 2
Q343	A – 3
Q346	A – 4

DIODE	
D315	C – 6
D316	D – 7
D317	B – 4
D318	A – 4
D319	A – 4
D320	A – 4
D321	A – 3
D322	A – 4
D323	A – 4
D324	A – 2
D325	A – 2
D326	A – 2
D327	A – 2
D328	A – 2
D329	A – 2
D1403	F – 7

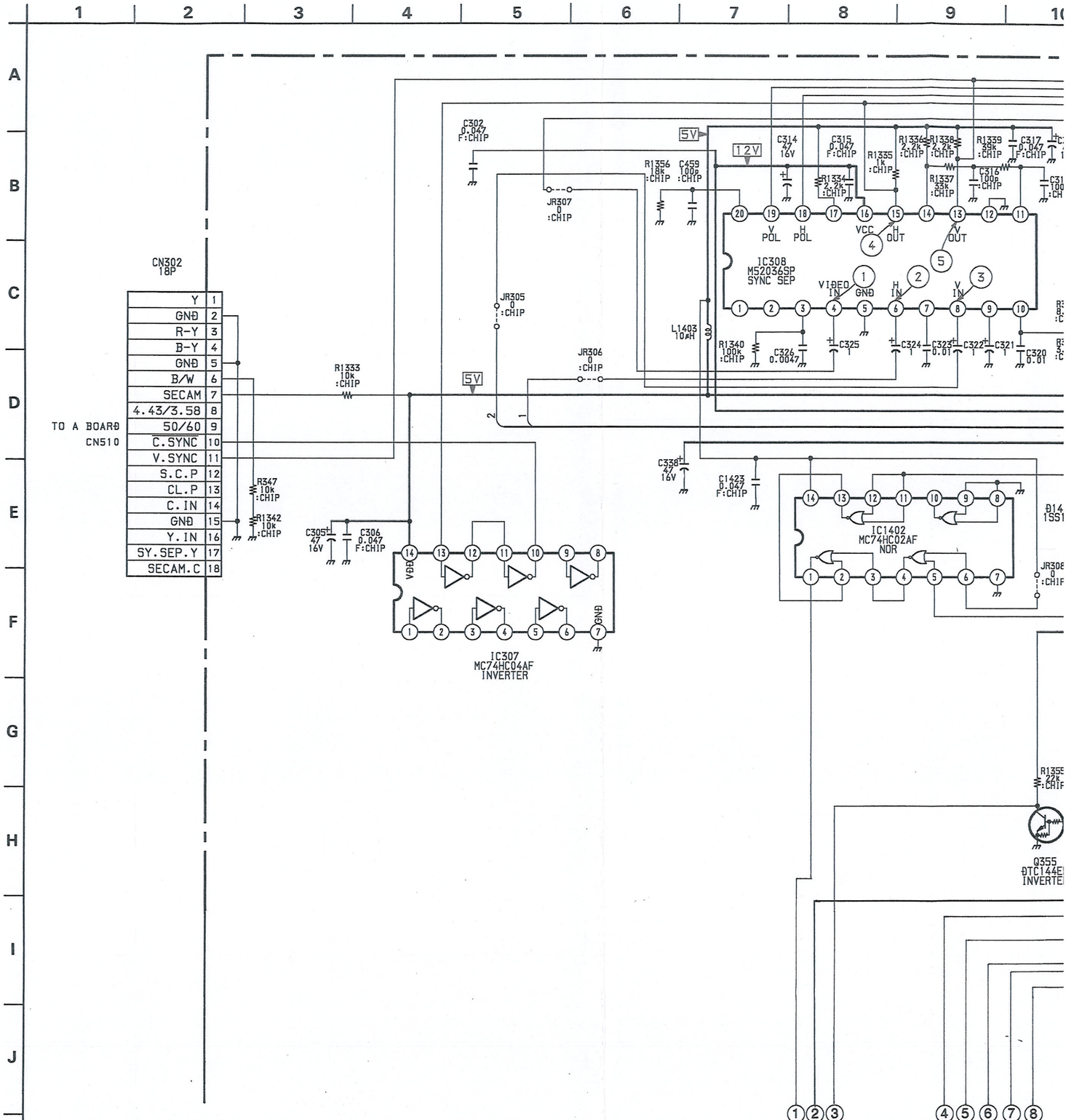

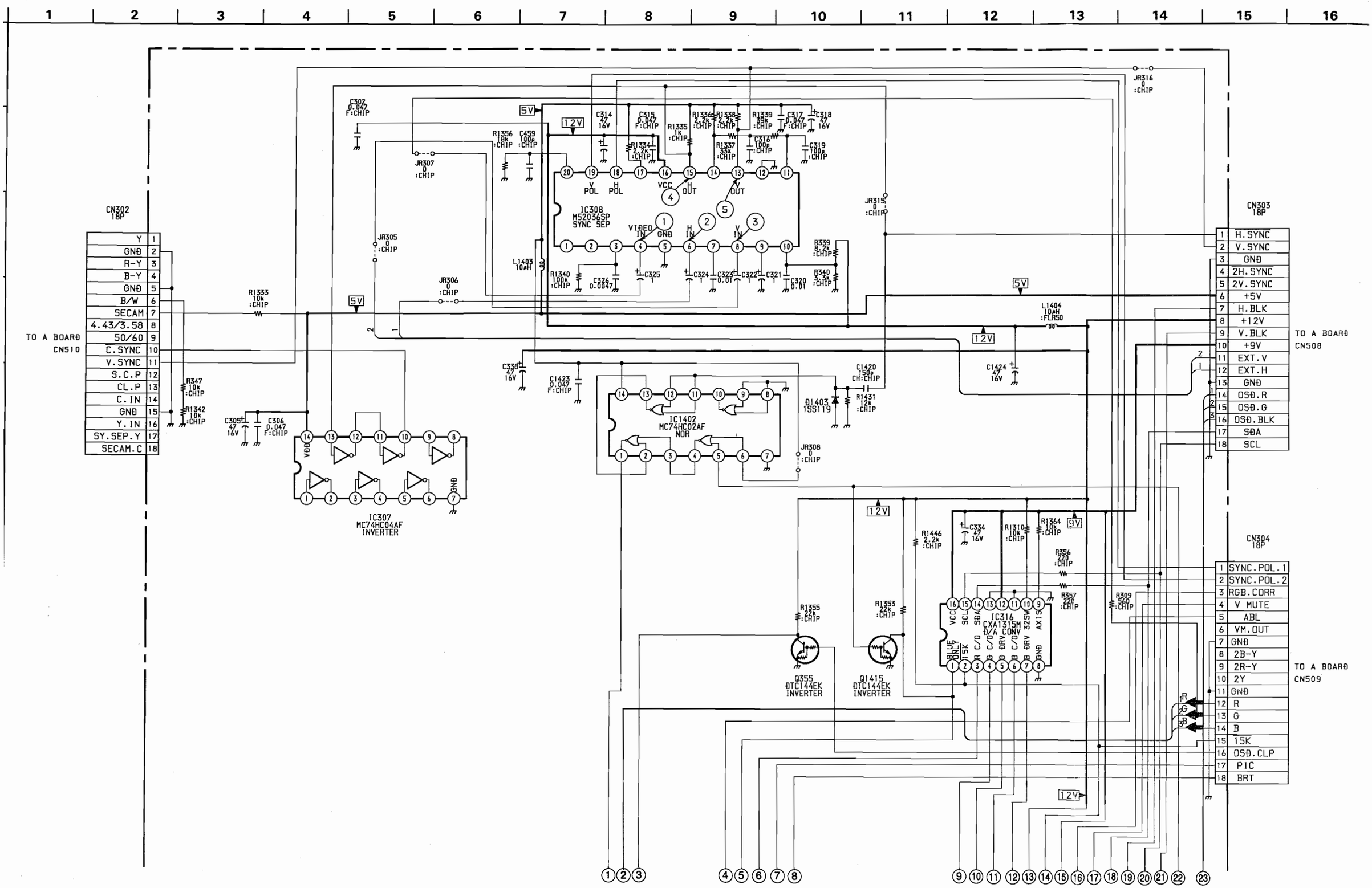
CN302
18P
Y
GND
R-Y
B-Y
GND
B/W
SECAM
4.43/3.58
50/60
C.SYNC
V.SYNC
S.C.P
CL.P
C.IN
GND
Y.IN
SY.SEP.Y
SECAM.C
TO A BOARD
CN510
IC308
M52036SP
SYNC SEP
VIDEO IN
GND
H IN
V IN
VCC
H OUT
V OUT
V POL
H POL
IC307
MC74HC04AF
INVERTER
IC1402
MC74HC02AF
NOR
IC316
CXA1315M
D/A CONV
Q355
DTC144EK
INVERTER
Q1415
DTC144EK
INVERTER
CN303
18P
H.SYNC
V.SYNC
GND
2H.SYNC
2V.SYNC
+5V
H.BLK
+12V
V.BLK
+9V
EXT.V
EXT.H
GND
OSD.R
OSD.G
OSD.BLK
SDA
SCL
TO A BOARD
CN508
CN304
18P
SYNC.POL.1
SYNC.POL.2
RGB.CORR
V MUTE
ABL
VM.OUT
GND
2B-Y
2R-Y
2Y
GND
R
G
B
15K
OSD.CLP
PIC
BRT
TO A BOARD
CN509
5V
12V
9V

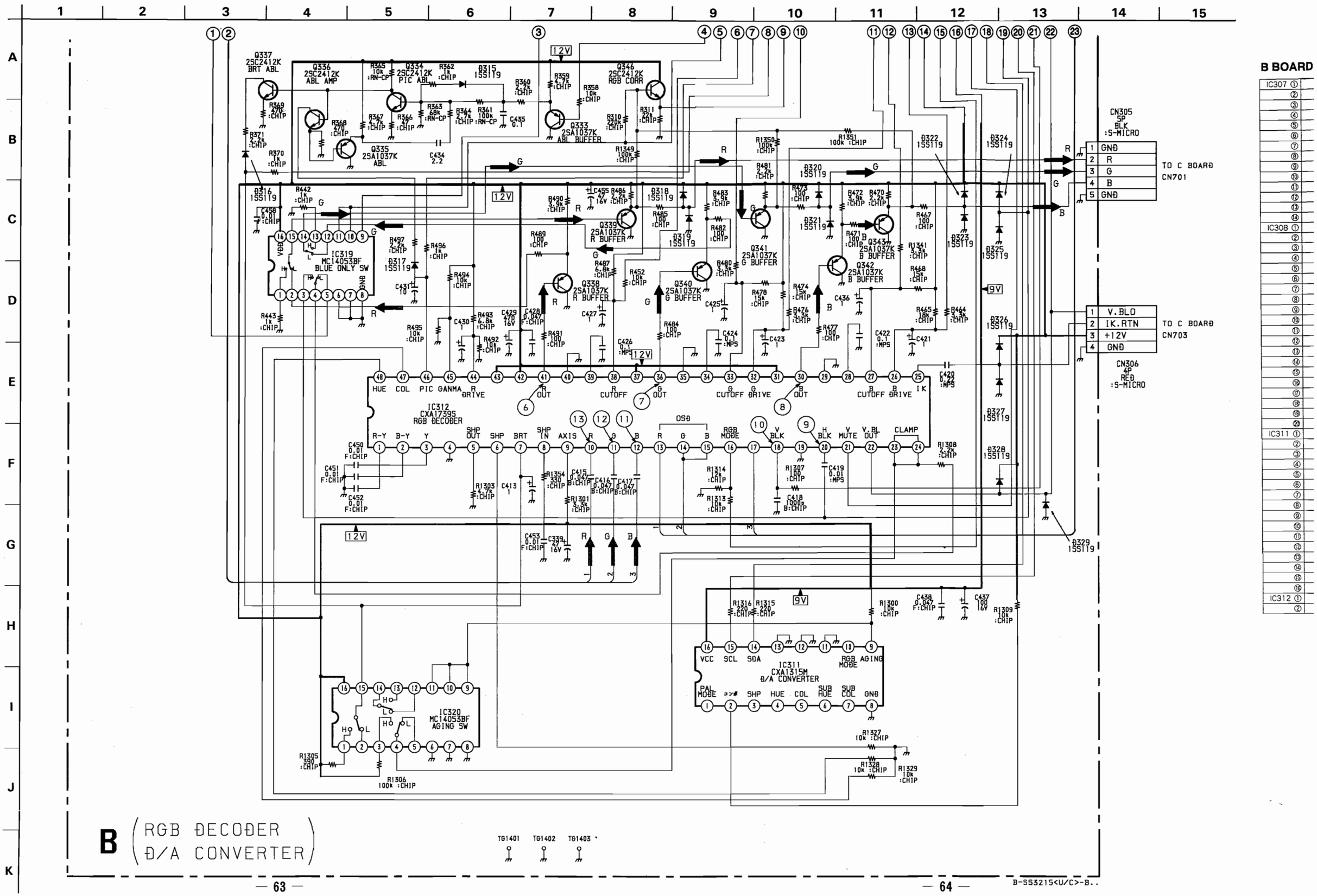
B BOARD
IC307 ① ② ③ ④ ⑤ ⑥ ⑦ ⑧ ⑨ ⑩ ⑪ ⑫ ⑬ ⑭
IC308 ① ② ③ ④ ⑤ ⑥ ⑦ ⑧ ⑨ ⑩ ⑪ ⑫ ⑬ ⑭ ⑮ ⑯ ⑰ ⑱ ⑲ ⑳
IC311 ① ② ③ ④ ⑤ ⑥ ⑦ ⑧ ⑨ ⑩ ⑪ ⑫ ⑬ ⑭ ⑮ ⑯
IC312 ① ②
CN305 5P BLK :S-MICRO
1 GND 2 R 3 G 4 B 5 GND
TO C BOARD CN701
CN306 4P RED :S-MICRO
1 V.BLO 2 IK.RTN 3 +12V 4 GND
TO C BOARD CN703
IC319 MC14053BF BLUE ONLY SW
IC320 MC14053BF AGING SW
IC312 CXA1739S RGB DECODER
IC311 CXA1315M D/A CONVERTER
Q337 2SC2412K BRT ABL
Q336 2SC2412K ABL AMP
Q334 2SC2412K PIC ABL
Q346 2SC2412K RGB CORR
Q333 2SA1037K ABL BUFFER
Q335 2SA1037K ABL
Q339 2SA1037K R BUFFER
Q338 2SA1037K R BUFFER
Q341 2SA1037K G BUFFER
Q340 2SA1037K G BUFFER
Q343 2SA1037K B BUFFER
Q342 2SA1037K B BUFFER
12V
9V
HUE COL PIC GANMA DRIVE
R OUT
R CUTOFF
G OUT
G CUTOFF DRIVE
B OUT
B CUTOFF DRIVE
IK
R-Y B-Y Y SHP OUT SHP BRT SHP IN AXIS R G B OSD R G B RGB MODE V BLK H BLK V MUTE V.BL OUT CLAMP
VCC SCL SDA RGB MODE AGING
PAL MODE SHP HUE COL SUB HUE SUB COL GND
TG1401 TG1402 TG1403
B (RGB DECODER / D/A CONVERTER)

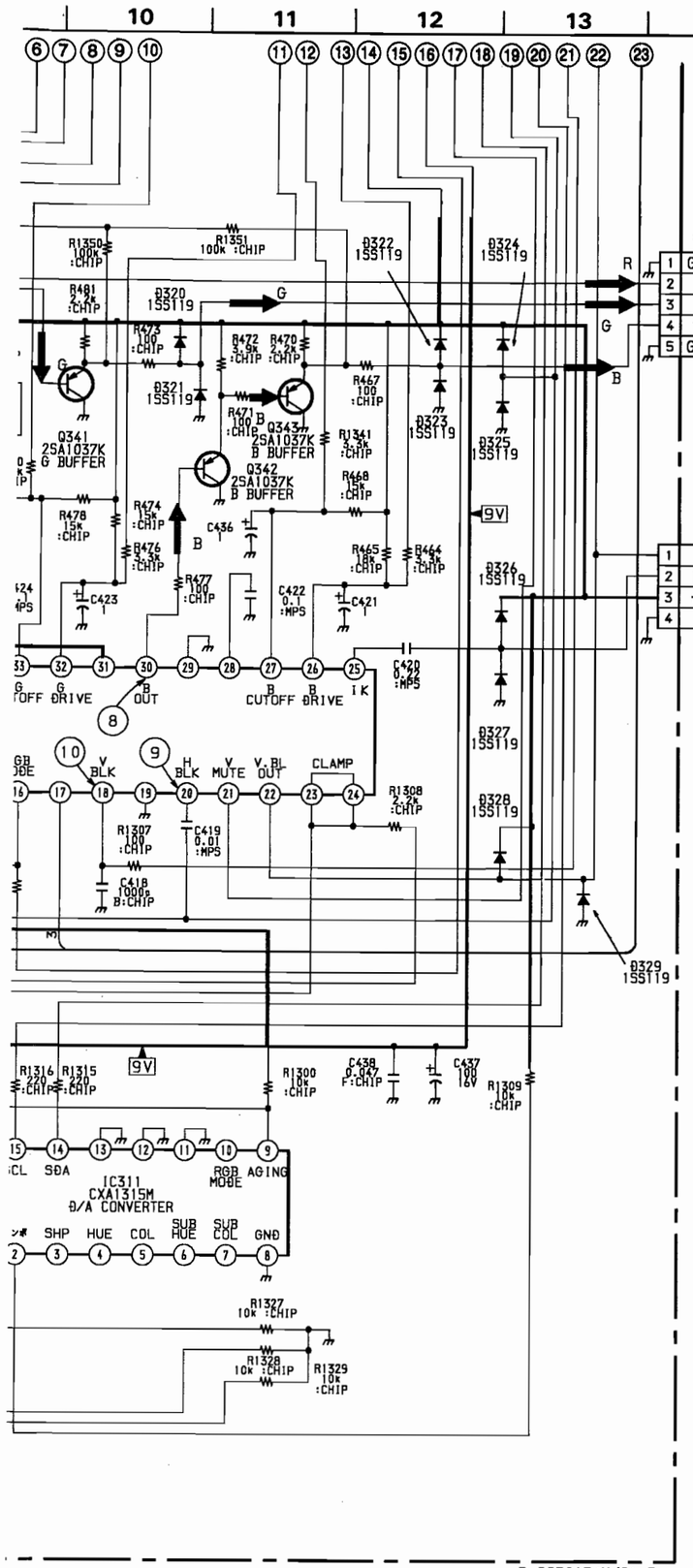

B BOARD * MARK

IC307 ①		③	5.1	⑦	4.5	⑪	0.3
②		④	0	⑧	0	⑫	0.3
③		⑤	8.8	⑨	0.2	⑬	5.0
④		⑥	0	⑩	0.2	⑭	5.1
⑤		⑦	2.0	⑪	0	Q333 B	2.3
⑥		⑧	3.2	⑫	9.0	C	0
⑦	0	⑨	12.0	⑬	0	E	2.9
⑧		⑩	6.0	⑭	4.9	Q334 B	0.7
⑨		⑪	6.0	⑮	4.9	C	0.2
⑩	4.5	⑫	6.0	⑯	9.0	E	0.1
⑪		⑬	0	IC319 ①	0	Q335 B	0.1
⑫		⑭	0	②	2.4	C	0
⑬	4.5	⑮	0	③	0.5	E	0.8
⑭	5.0	⑯	5.1	④	0.2	Q336 B	0.2
IC308 ①		⑰	0	⑤	0.3	C	5.7
②		⑱	0.2	⑥	0	E	0.1
③	4.6	⑲	0	⑦	0	Q337 B	0.1
④	4.6	⑳	3.2	⑧	0	C	3.2
⑤	0	㉑	0	⑨	0	E	0
⑥	6.2	㉒	0.6	⑩	0.2	Q338 B	1.7
⑦	1.0	㉓	0.2	⑪	0.2	C	0
⑧	6.3	㉔	0.2	⑫	2.3	E	2.3
⑨	3.6	㉕	2.6	⑬	0	Q339 B	2.4
⑩	3.0	㉖	5.7	⑭	2.4	C	0
⑪	0.8	㉗	5.4	⑮	2.4	E	3.0
⑫	0	㉘	7.3	⑯	12.0	Q340 B	1.7
⑬	0.1	㉙	0	IC320 ①	12.0	C	0
⑭	0.7	㉚	1.4	②		E	2.3
⑮	4.5	㉛	12.0	③	11.9	Q341 B	2.3
⑯	12.0	㉜	6.6	④	0.2	C	0
⑰	0.2	㉝	6.4	⑤		E	3.0
⑱	5.0	㉞	7.3	⑥	0	Q342 B	1.4
⑲	5.0	㉟	0	⑦	0	C	0
⑳	3.5	㊱	1.7	⑧	0	E	2.0
IC311 ①		㊲	12.0	⑨	0.2	Q343 B	2.0
②	10.0	㊳	8.4	⑩	0.2	C	0
③		㊴	6.7	⑪	0.2	E	2.7
④		㊵	0	⑫		Q346 B	2.5
⑤		㊶	1.7	⑬		C	12.0
⑥		㊷	12.0	⑭		E	2.0
⑦		㊸	12.0	⑮	2.0	Q355 B	4.9
⑧	0	㊹	7.1	⑯	9.0	C	0
⑨	0.2	㊺	6.0	IC1402 ①	0.2	E	0
⑩		㊻	5.1	②	5.0	Q1415 B	0.6
⑪	0	㊼	0	③	0	C	0
⑫	0	㊽	0	④	0	E	0
⑬	0	IC316 ①	0	⑤	0.6		
⑭	4.9	②		⑥	5.1		
⑮	4.9	③	4.7	⑦	0		
⑯	9.0	④	5.2	⑧	0		
IC312 ①	4.4	⑤	5.5	⑨	0		
②	4.4	⑥	3.9	⑩			

• B BOARD WAVEFORMS

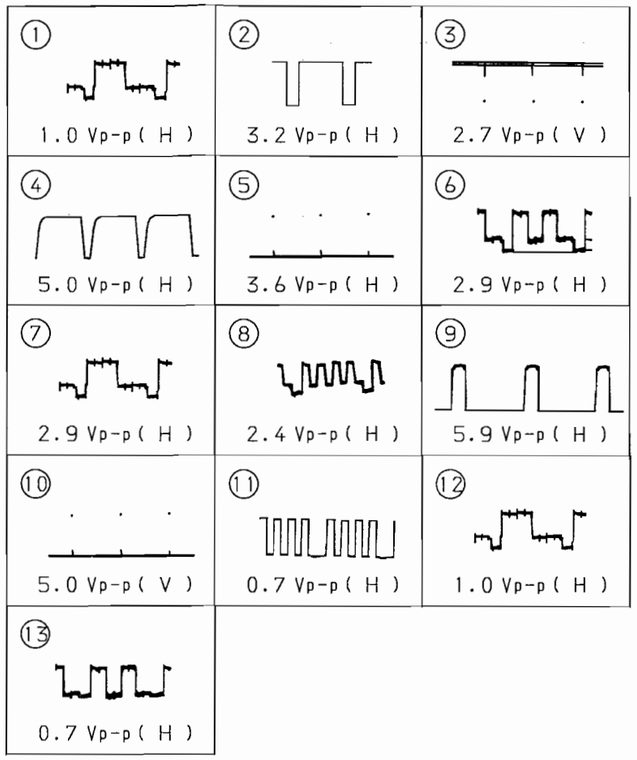

)	4.5	⑪	0.3
)	0	⑫	0.3
)	0.2	⑬	5.0
)	0.2	⑭	5.1
)	0	Q333 B	2.3
)	9.0	C	0
)	0	E	2.9
)	4.9	Q334 B	0.7
)	4.9	C	0.2
)	9.0	E	0.1
)	0	Q335 B	0.1
)	2.4	C	0
)	0.5	E	0.8
)	0.2	Q336 B	0.2
)	0.3	C	5.7
)	0	E	0.1
)	0	Q337 B	0.1
)	0	C	3.2
)	0	E	0
)	0.2	Q338 B	1.7
)	0.2	C	0
)	2.3	E	2.3
)	0	Q339 B	2.4
)	2.4	C	0
)	2.4	E	3.0
)	12.0	Q340 B	1.7
)	12.0	C	0
)		E	2.3
)	11.9	Q341 B	2.3
)	0.2	C	0
)		E	3.0
)	0	Q342 B	1.4
)	0	C	0
)	0	E	2.0
)	0.2	Q343 B	2.0
)	0.2	C	0
)	0.2	E	2.7
)		Q346 B	2.5
)		C	12.0
)		E	2.0
)	2.0	Q355 B	4.9
)	9.0	C	0
)	0.2	E	0
)	5.0	Q1415 B	0.6
)	0	C	0
)	0	E	0
)	0.6		
)	5.1		
)	0		
)	0		
)	0		
)			

• B BOARD WAVEFORMS

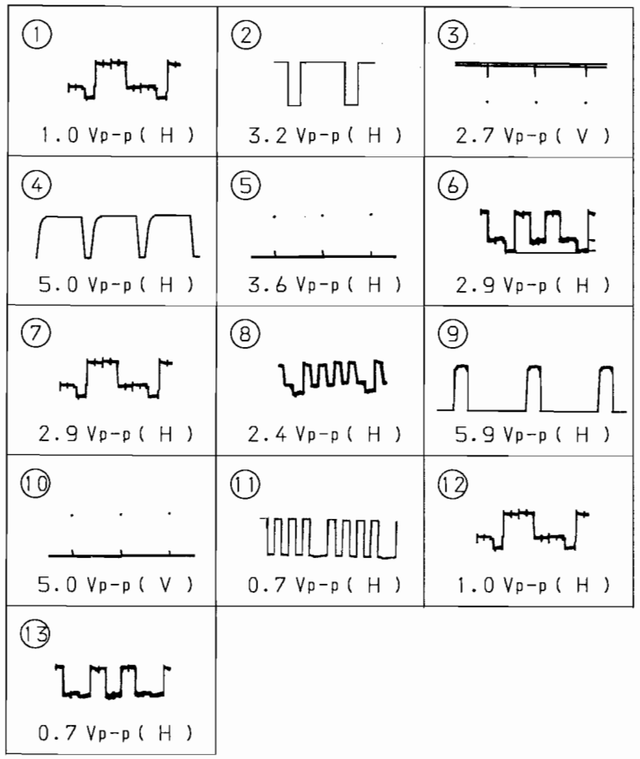

Schematic diagram
← B (2/2) board

Schematic diagrams
DS M boards →

DS BOARD * MARK

IC1601	①	4.3
	②	7.9
	③	8.4
	④	- 0.2
	⑤	3.9
	⑥	3.2
	⑦	5.7
	⑧	6.3
	⑨	5.9
	⑩	12.0
	⑪	6.4
	⑫	5.6
	⑬	0
	⑭	0
	⑮	0
	⑯	0.9
	⑰	0.7
	⑱	6.2
	⑲	6.0
	⑳	12.0
IC1602	①	0.2
	②	0.2
	③	
	④	- 7.0
	⑤	2.1
	⑥	2.0
	⑦	2.0
	⑧	12.0
Q1601	B	12.3
	C	2.1
	E	12.0
Q1604	B	0.8
	C	0.2
	E	0
Q1612	B	0.7
	C	0
	E	0
Q1616	B	5.6
	C	12.0
	E	5.6
Q1617	B	5.6
	C	0
	E	5.6

• DS BOARD WAVEFORMS

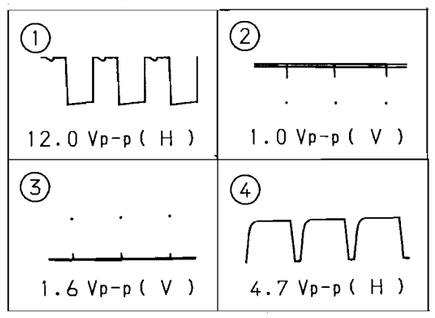

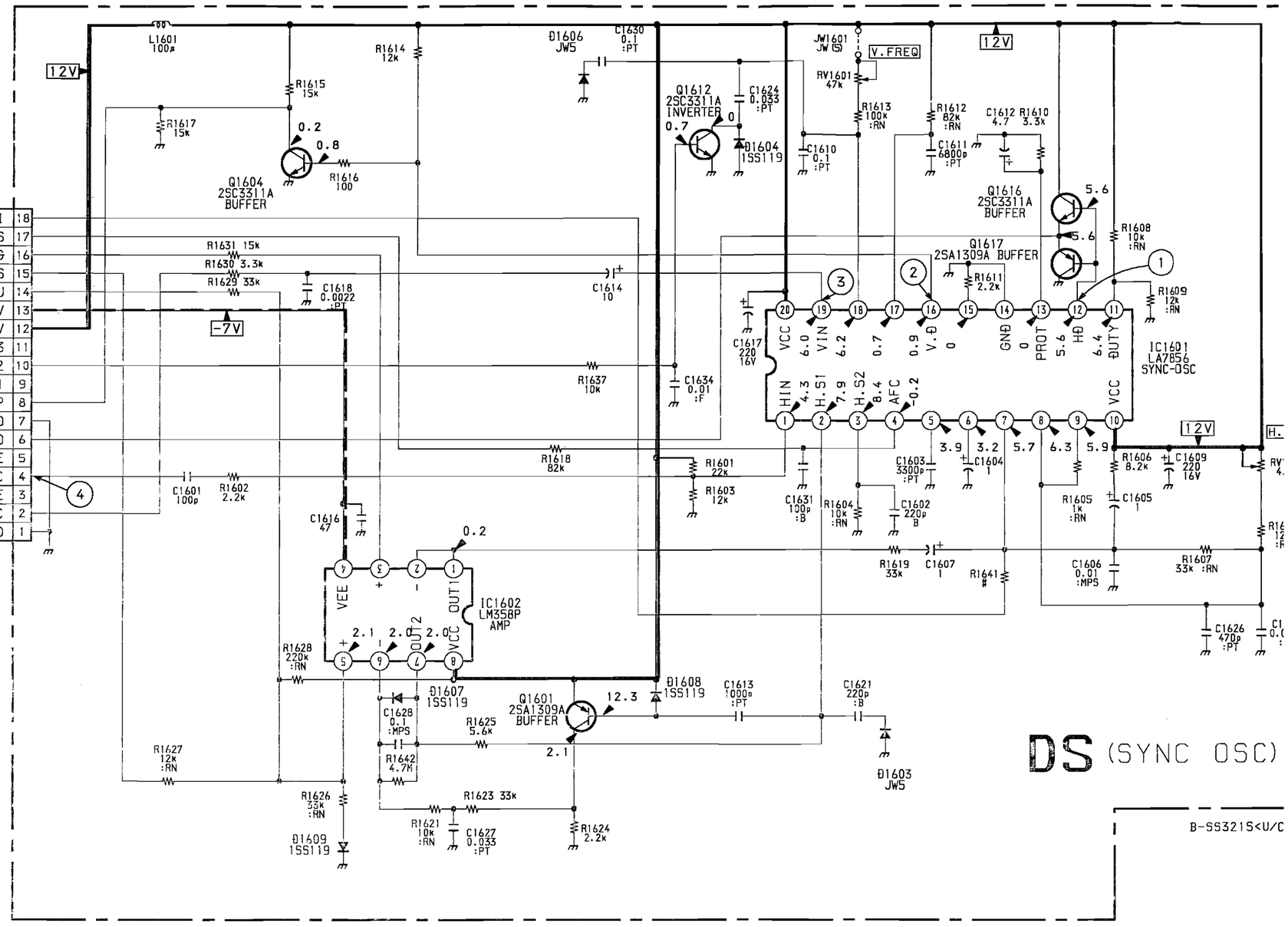

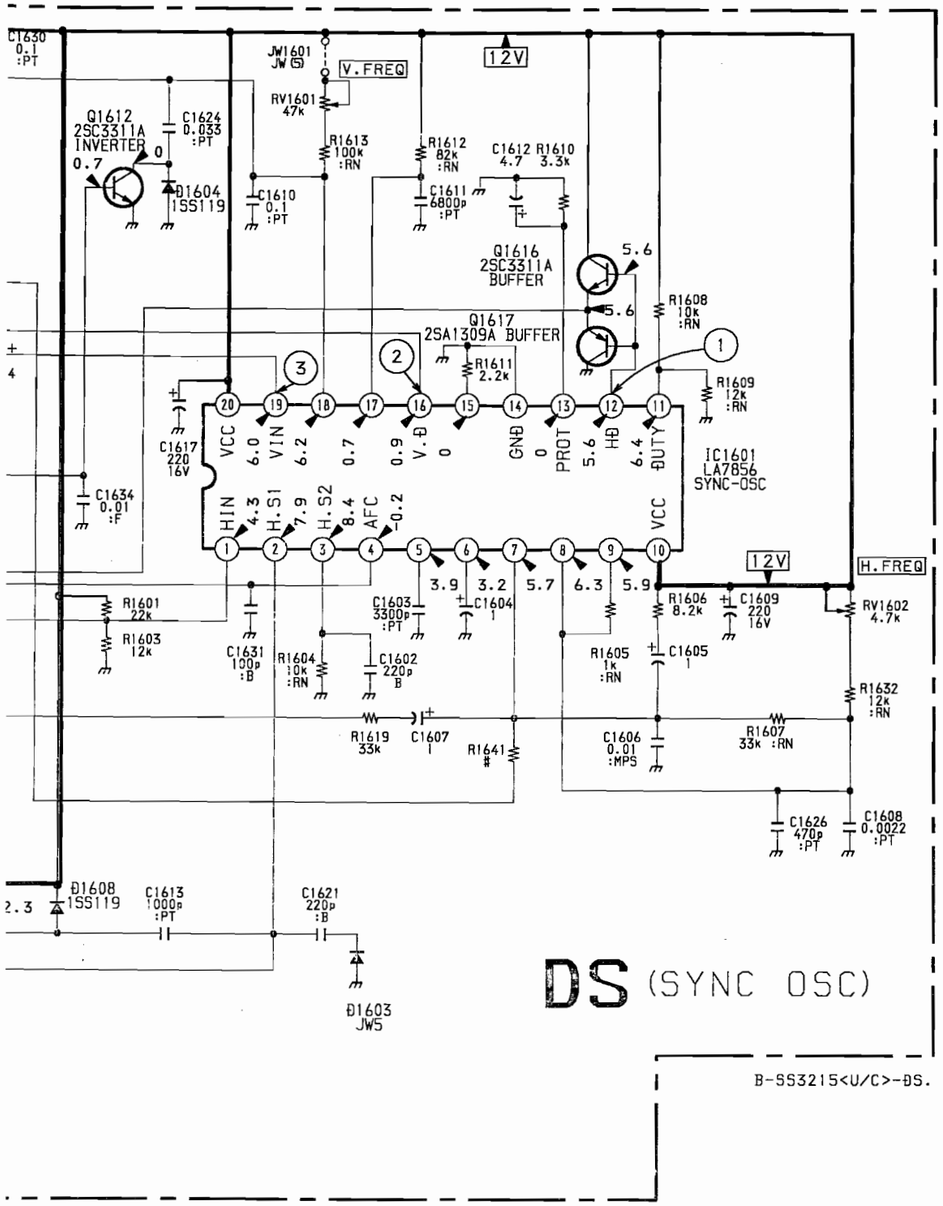

M BOARD * MARK

IC801	
①	4.9
②	
③	0
④	0
⑤	0
⑥	4.9
⑦	0
⑧	4.9
⑨	2.2
⑩	*
⑪	4.9
⑫	4.9
⑬	*
⑭	5.0
⑮	4.9
⑯	0
⑰	4.5
⑱	4.9
⑲	4.9
⑳	
㉑	5.0
㉒	5.0
㉓	
㉔	0
㉕	4.9
㉖	5.0
㉗	
㉘	4.9
㉙	4.9
㉚	4.9
㉛	0
㉜	0
㉝	6.0
㉞	4.9
㉟	4.9
㊱	0
㊲	4.9
㊳	4.9
㊴	5.0
㊵	0
㊶	4.9
㊷	
㊸	0
㊹	0
㊺	0
㊻	4.9
㊼	4.9
㊽	0

IC802	
①	0.3
②	4.2
③	0
④	4.9
⑤	0
⑥	
⑦	0
⑧	0
⑨	5.0
⑩	5.0
⑪	0
⑫	5.0
⑬	0
⑭	5.0

IC803	
①	
②	4.9
③	4.9
④	4.9
⑤	4.9
⑥	5.0
⑦	
⑧	2.5
⑨	2.4
⑩	0
⑪	
⑫	0
⑬	0
⑭	
⑮	0
⑯	
⑰	
⑱	
⑲	4.9
⑳	4.9

IC804	
①	0.4
②	
③	0
④	0
⑤	5.0
⑥	
⑦	1.5
⑧	4.9

IC805	
①	0
②	4.9
③	4.9
④	0
⑤	0
⑥	
⑦	0
⑧	4.9
⑨	4.9
⑩	0
⑪	4.9
⑫	4.9
⑬	0
⑭	4.9

IC806	
①	4.9
②	4.9
③	4.9
④	0
⑤	4.9
⑥	4.9
⑦	4.9
⑧	5.0

IC808	
①	4.9
②	
③	
④	
⑤	
⑥	
⑦	0
⑧	0
⑨	0
⑩	
⑪	
⑫	0
⑬	0
⑭	5.0

Q801	
B	0
C	1.4
E	0

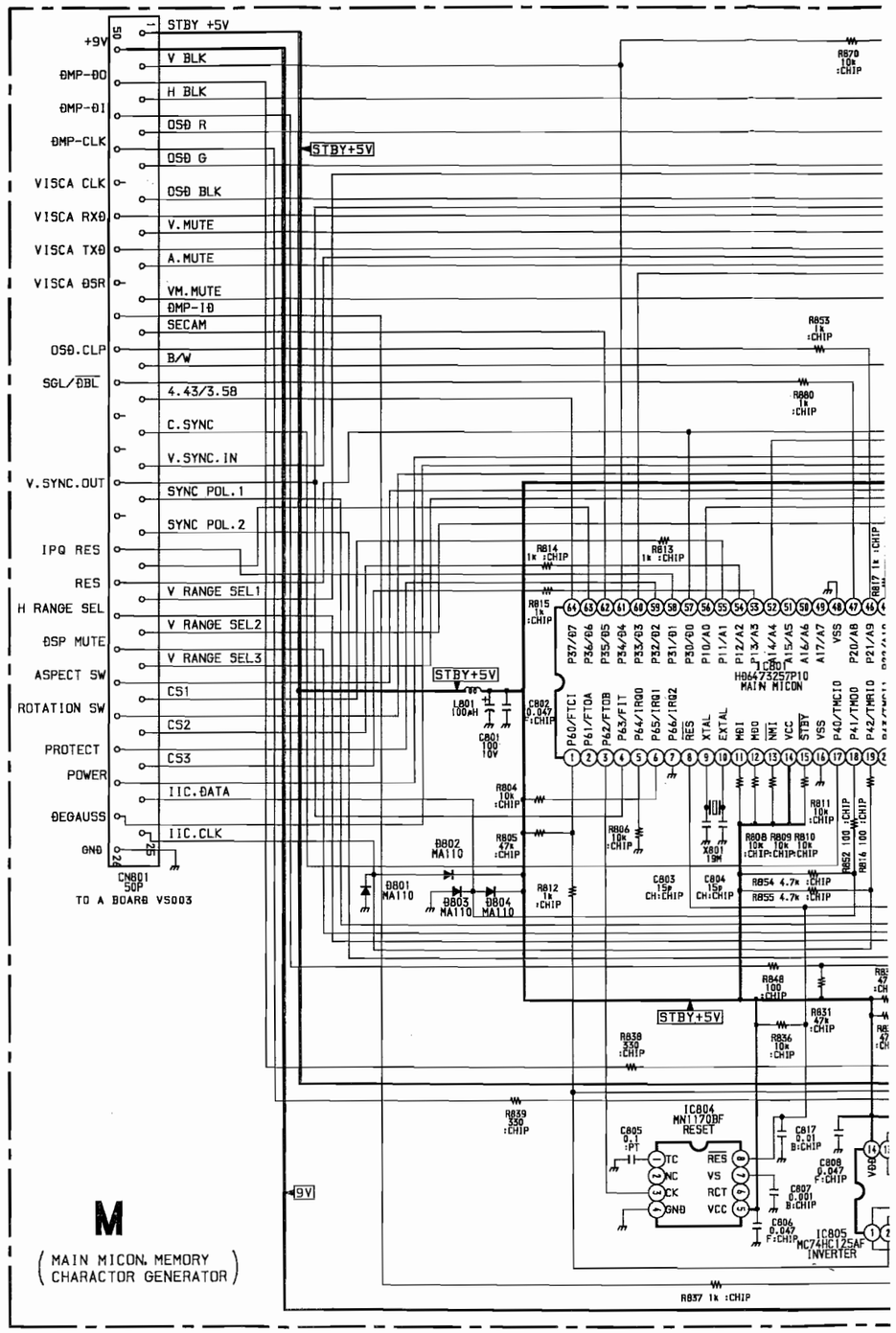

RD * MARK

4.9	㊿		IC804 ①	0.4	
	51		②		
0	52	4.9	③	0	
0	53	0	④	0	
0	54	0	⑤	5.0	
4.9	55	0	⑥		
0	56	4.9	⑦	1.5	
4.9	57	4.9	⑧	4.9	
2.2	58	0	IC805 ①	0	
*	59	4.4	②	4.9	
4.9	60	4.9	③	4.9	
4.9	61	0.2	④	0	
*	62	5.1	⑤	0	
5.0	63	4.9	⑥		
4.9	64	0	⑦	0	
0	IC802 ①	0.3	⑧	4.9	
4.5	②	4.2	⑨	4.9	
4.9	③	0	⑩	0	
4.9	④	4.9	⑪	4.9	
	⑤	0	⑫	4.9	
5.0	⑥		⑬	0	
5.0	⑦	0	⑭	5.0	
	⑧	0	IC806 ①	4.9	
0	⑨	5.0	②	4.9	
4.9	⑩	5.0	③	4.9	
5.0	⑪	0	④	0	
	⑫	5.0	⑤	4.9	
4.9	⑬	0	⑥	4.9	
4.9	⑭	5.0	⑦	4.9	
4.9	IC803 ①		⑧	5.0	
0	②	4.9	IC808 ①	4.9	
0	③	4.9	②		
6.0	④	4.9	③		
4.9	⑤	4.9	④		
4.9	⑥	5.0	⑤		
0	⑦		⑥		
4.9	⑧	2.5	⑦	0	
4.9	⑨	2.4	⑧	0	
5.0	⑩	0	⑨	0	
0	⑪		⑩		
4.9	⑫	0	⑪		
	⑬	0	⑫	0	
0	⑭		⑬	0	
0	⑮	0	⑭	5.0	
0	⑯		Q801 B	0	
4.9	⑰		C	1.4	
4.9	⑱		E	0	
0	⑲	4.9			
	⑳	4.9			

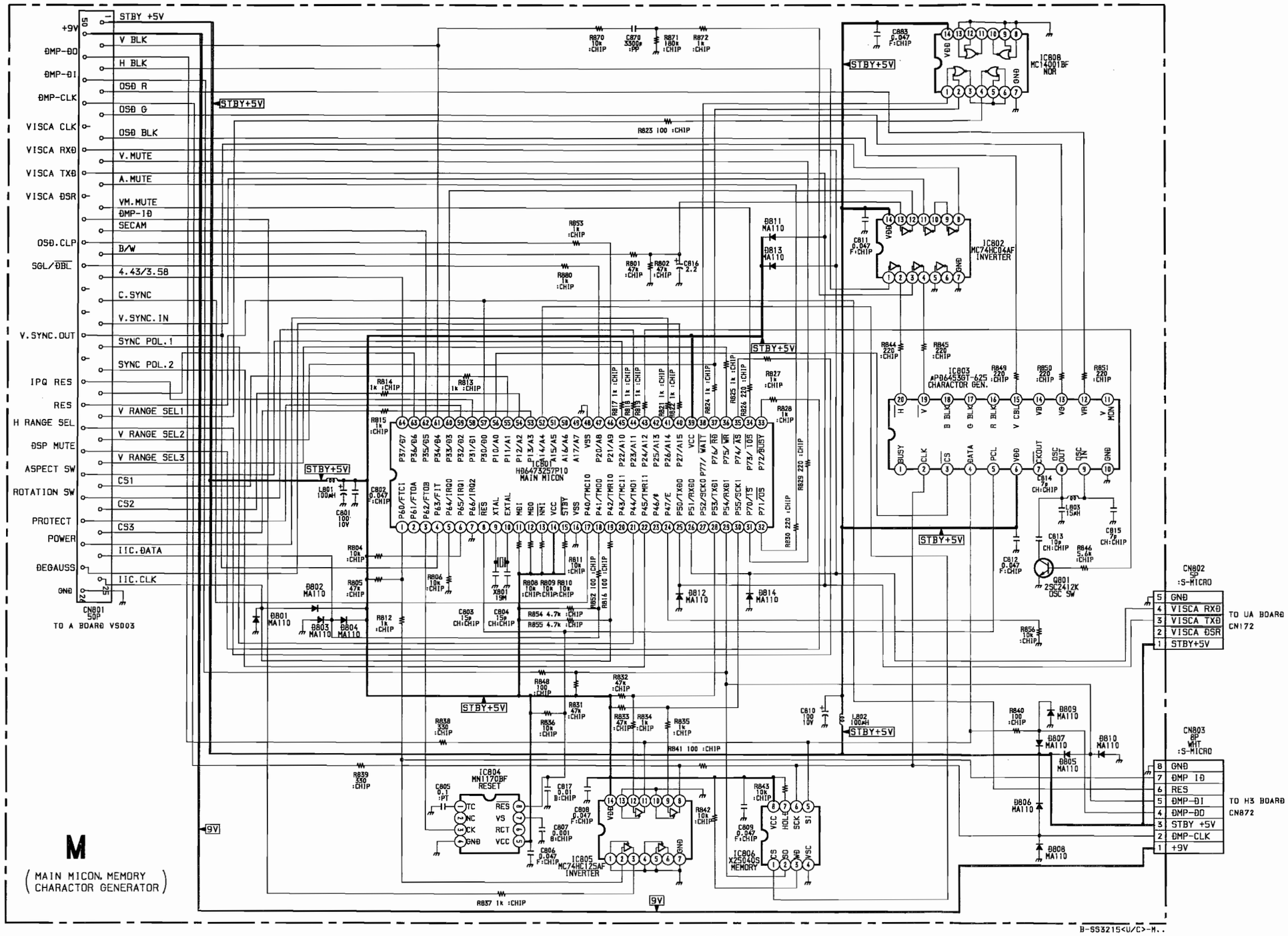

M [MAIN MICON, MEMORY, CHARACTOR GENERATOR] DS [SYNC OSC]

– **M BOARD** – 〈Component Side〉

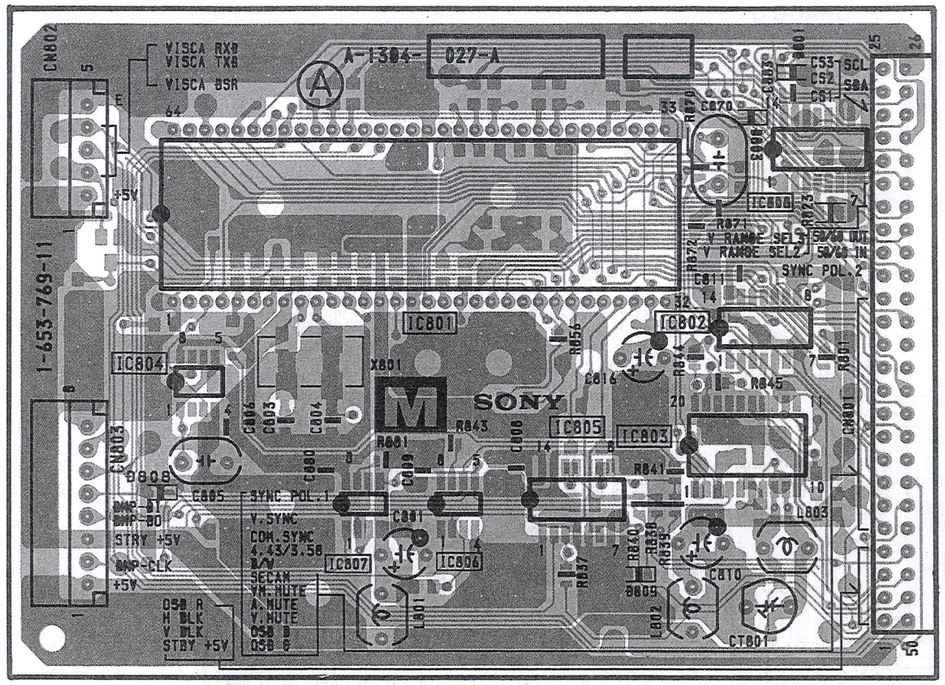

〈Conductor Side〉

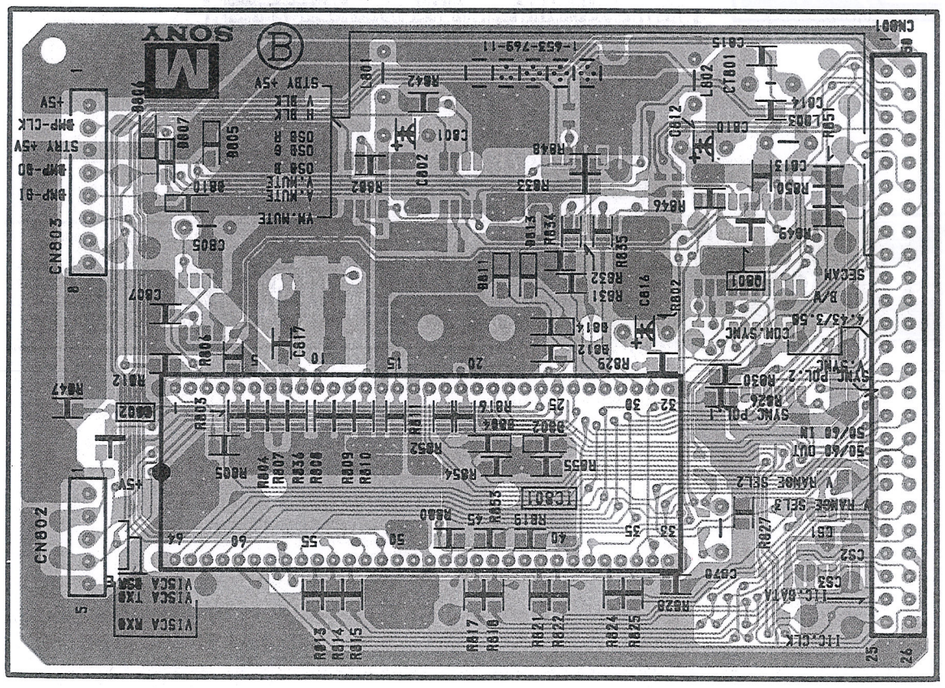

– **DS BOARD** –

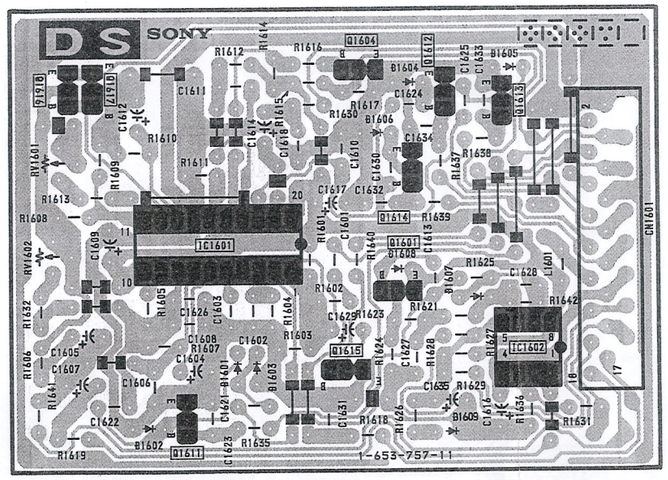

Note :

- : Pattern from the side which enables seeing.
- : Pattern of the rear side.

D [DYNAMIC CONVERGENSE, QUADRA – POLE] H2 [USER CONTROL]

– D BOARD –

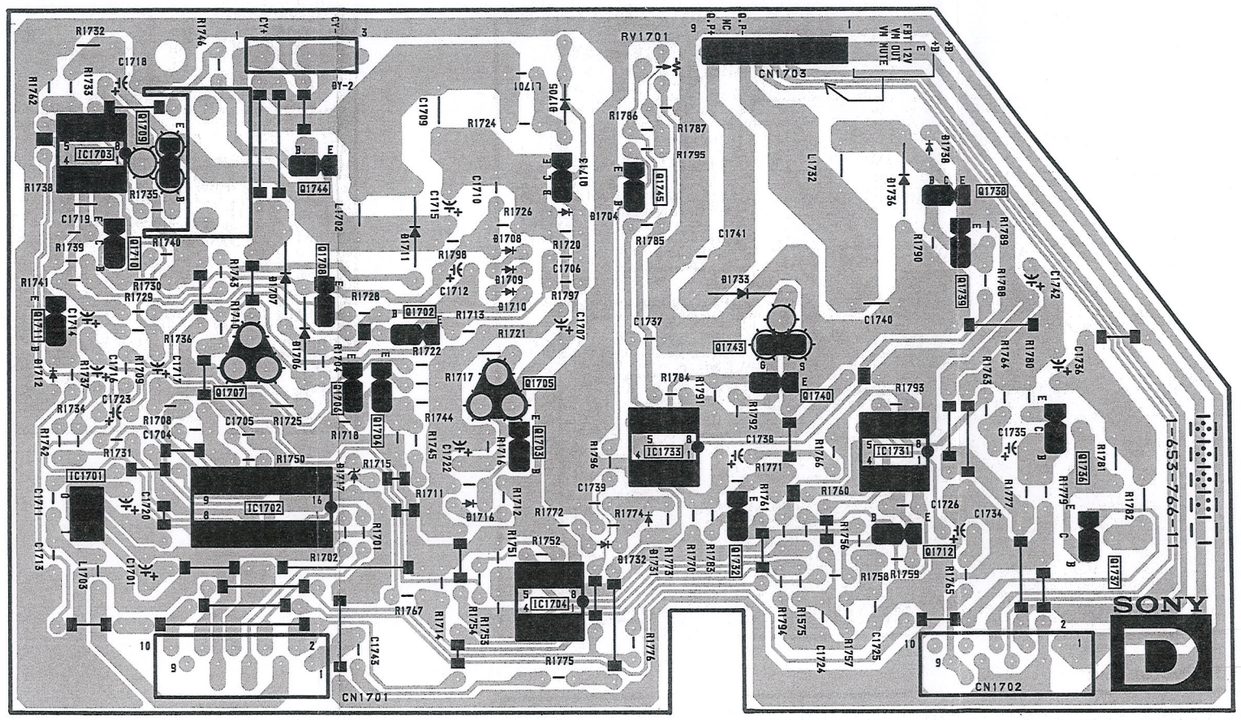

– H2 BOARD –

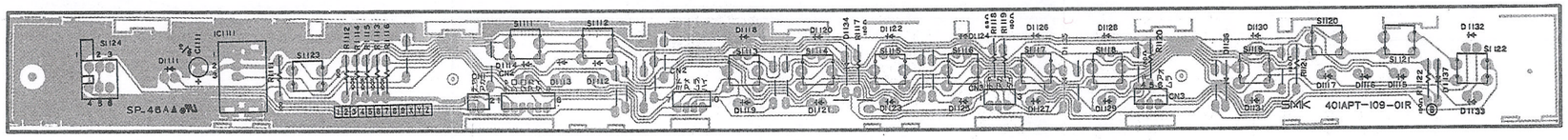

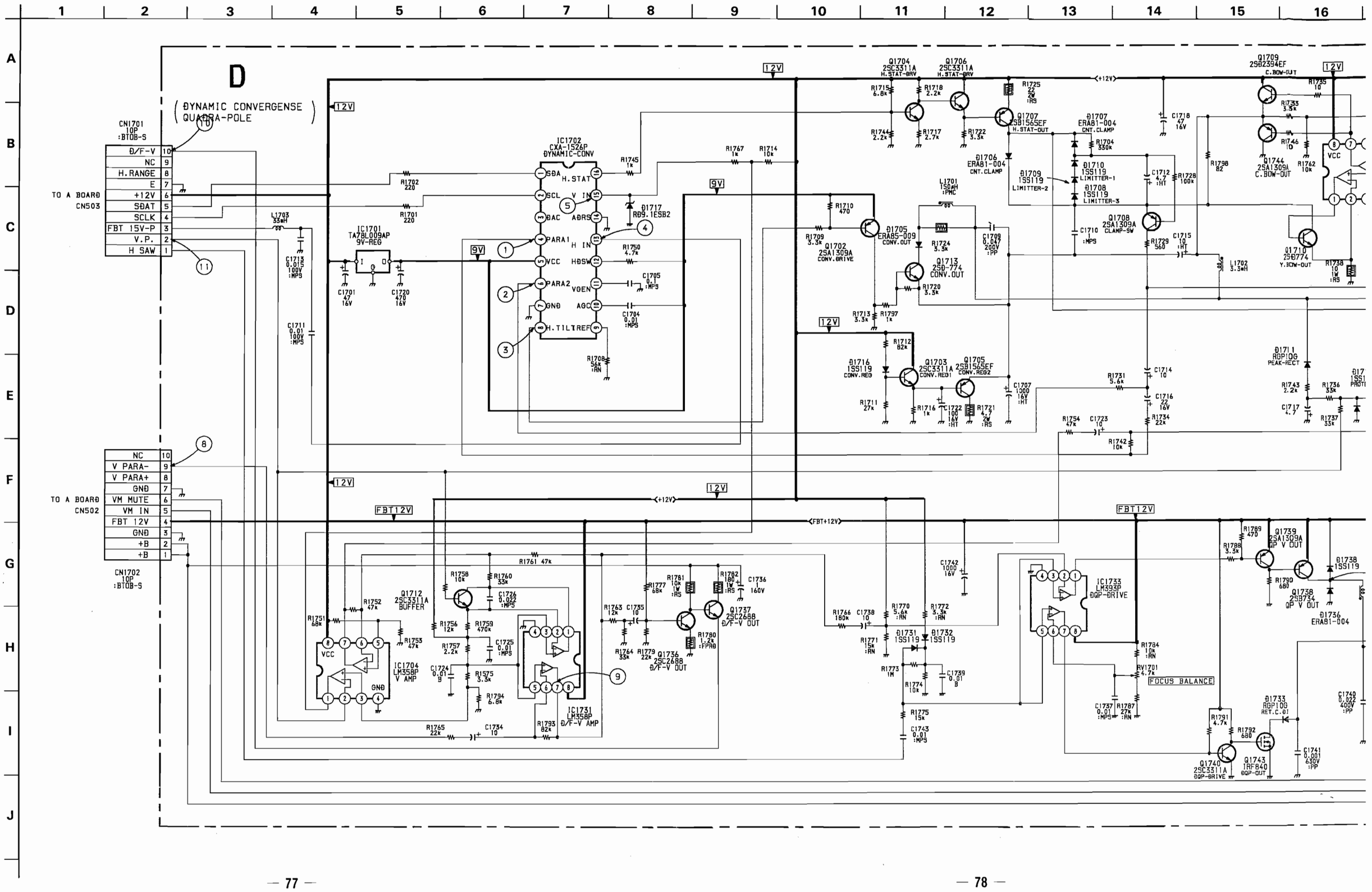
D
(DYNAMIC CONVERGENSE QUADRA-POLE)
CN1701 10P :BTOB-S
Ð/F-V 10
NC 9
H.RANGE 8
E 7
+12V 6
SDAT 5
SCLK 4
FBT 15V-P 3
V.P. 2
H SAW 1
TO A BOARD CN503
IC1702 CXA-1526P DYNAMIC-CONV
SDA
SCL
DAC
PARA1
VCC
PARA2
GND
H.TILTREF
H.STAT
V IN
ADRS
H IN
HDSW
VGEN
AGC
IC1701 TA78L009AP 9V-REG
L1703 33mH
C1713 0.015 100V :MPS
C1711 0.01 100V :MPS
C1701 47 16V
C1720 470 16V
R1702 220
R1701 220
R1745 1k
R1767 1k
R1714 10k
D1717 RD9.1ESB2
R1750 4.7k
C1705 0.1 :MPS
C1704 0.01 :MPS
R1708 56k :RN
Q1704 2SC3311A H.STAT-DRV
Q1706 2SC3311A H.STAT-DRV
R1715 6.8k
R1718 2.2k
R1725 22 2W :RS
R1744 2.2k
R1717 2.7k
R1722 3.3k
Q1707 2SB1565EF H.STAT-OUT
D1706 ERA81-004 CNT.CLAMP
D1707 ERA81-004 CNT.CLAMP
D1709 1SS119 LIMITTER-2
D1710 1SS119 LIMITTER-1
D1708 1SS119 LIMITTER-3
R1704 330k
C1718 47 16V
R1798 82
Q1709 2SD2394EF C.BOW-OUT
R1735 10
R1733 3.3k
R1746 10
R1762 10k
Q1744 2SA1309A C.BOW-OUT
VCC
L1701 150uH :PMC
R1710 470
R1709 3.3k
Q1705 ERA85-009 CONV.OUT
Q1708 2SA1309A CLAMP-SW
C1712 4.7 :HT
R1728 100k
C1715 10 :HT
R1729 560
C1710 :MPS
R1724 3.5k
C1709 0.047 200V :PP
Q1702 2SA1309A CONV.DRIVE
Q1713 2SD774 CONV.OUT
R1720 3.3k
L1702 3.3mH
Q1710 2SD774 Y.BOW-OUT
R1738 10 1W :RS
R1713 3.3k
R1797 1k
R1712 82k
D1716 1SS119 CONV.REG
Q1703 2SC3311A CONV.REG1
Q1705 2SB1565EF CONV.REG2
R1711 27k
R1716 1k
C1722 100 16V :HT
R1721 4.7 2W :RS
C1707 1000 16V :HT
D1711 RGP10G PEAK-RECT
R1731 5.6k
C1714 10
C1716 22 16V
R1734 22k
R1754 47k
C1723 10
R1742 10k
R1743 2.2k
R1736 33k
C1717 4.7
R1737 33k
NC 10
V PARA- 9
V PARA+ 8
GND 7
VM MUTE 6
VM IN 5
FBT 12V 4
GND 3
+B 2
+B 1
TO A BOARD CN502
CN1702 10P :BTOB-S
R1761 47k
R1758 10k
R1760 33k
C1726 0.022 :MPS
R1752 47k
R1751 68k
R1753 47k
IC1704 LM358P V AMP
R1756 12k
R1759 470k
R1757 2.2k
C1725 0.01 :MPS
C1724 0.01 B
R1575 3.3k
R1794 6.8k
Q1712 2SC3311A BUFFER
IC1731 LM358P Ð/F-V AMP
R1765 22k
C1734 10
R1793 82k
R1763 12k
C1735 10
R1764 33k
R1779 22k
Q1736 2SC2688 Ð/F-V OUT
R1777 68k
R1781 10k 1W :RS
R1782 180 1W :RS
C1736 1 160V
R1780 1.2k :FPRB
Q1737 2SC2688 Ð/F-V OUT
R1766 180k
C1738 10
R1770 5.6k :RN
R1772 3.3k :RN
R1771 15k :RN
D1731 1SS119
D1732 1SS119
R1773 1M
R1774 10k
C1739 0.01 B
R1775 15k
C1743 0.01 :MPS
C1742 1000 16V
IC1733 LM393P ÐQP-DRIVE
R1784 10k :RN
RV1701 4.7k
FOCUS BALANCE
C1737 0.01 :MPS
R1787 27k :RN
R1789 470
R1788 3.3k
Q1739 2SA1309A QP V OUT
R1790 680
Q1738 2SB734 QP V OUT
D1738 1SS119
D1736 ERA81-004
D1733 RGP10G RET.C.01
R1791 4.7k
R1792 680
Q1740 2SC3311A ÐQP-DRIVE
Q1743 IRF840 ÐQP-OUT
C1740 0.022 400V :PP
C1741 0.001 630V :PP
12V
9V
+12V
FBT12V
FBT+12V

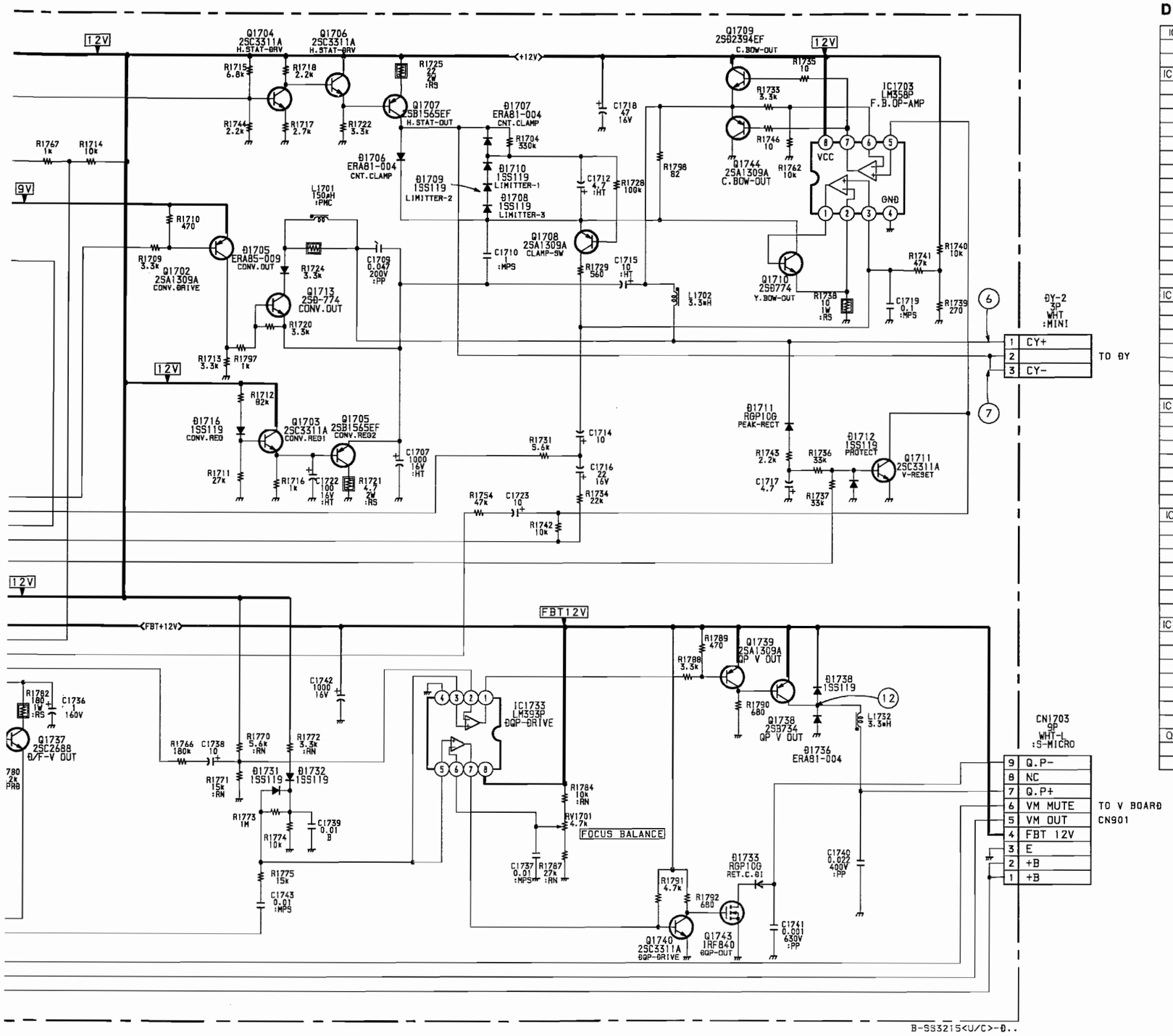

D BOARD * MARK

IC1701 I	12.0	Q1703 B	2.8
G	0	C	12.0
O	9.1	E	2.2
IC1702 ①	4.9	Q1704 B	3.4
②	4.9	C	9.8
③	–	E	2.8
④	4.1	Q1705 B	2.2
⑤	9.1	C	0.5
⑥	3.0	E	2.8
⑦	0	Q1706 B	9.8
⑧	5.9	C	12.0
⑨	2.0	E	9.2
⑩	4.7	Q1707 B	9.2
⑪	5.2	C	5.4
⑫	9.1	E	9.8
⑬	4.8	Q1708 B	5.2
⑭	0	C	0.8
⑮	8.6	E	5.1
⑯	3.7	Q1709 B	6.0
IC1703 ①	–	C	12.0
②	–	E	5.4
③	–	Q1710 B	1.4
④	0	C	5.0
⑤	–	E	0.8
⑥	–	Q1711 B	– 0.5
⑦	–	C	4.1
⑧	12.0	E	0
IC1704 ①	10.4	Q1712 B	0.2
②	0.2	C	3.6
③	3.4	E	5.0
④	0	Q1713 B	2.6
⑤	4.9	C	5.2
⑥	5.0	E	2.8
⑦	6.7	Q1736 B	2.8
⑧	12.0	C	95.0
IC1731 ①	3.6	E	2.2
②	5.0	Q1737 B	95.0
③	5.0	C	109.3
④	0	E	94.5
⑤	5.0	Q1738 B	11.8
⑥	5.0	C	1.8
⑦	5.0	E	12.0
⑧	12.0	Q1739 B	11.3
IC1733 ①	2.1	C	11.8
②	8.8	E	12.0
③	7.5	Q1740 B	0.4
④	0	C	7.3
⑤	7.5	E	0
⑥	8.4	Q1743 B	7.3
⑦	0.4	C	45.3
⑧	12.0	E	0
Q1702 B	8.9	Q1744 B	6.0
C	4.4	C	0
E	9.0	E	5.4

• D BOARD WAVEFORMS

① 1.7 Vp-p (V)	② 1.7 Vp-p (V)	③ 8.8 Vp-p (
④ 4.0 Vp-p (H)	⑤ 8.0 Vp-p (V)	⑥ 79.0 Vp-p (
⑦ 4.0 Vp-p (V)	⑧ 2.0 Vp-p (V)	⑨ 7.5 Vp-p (
⑩ 28.0 Vp-p (V)	⑪ 5.0 Vp-p (V)	⑫ 12.0 Vp-p (

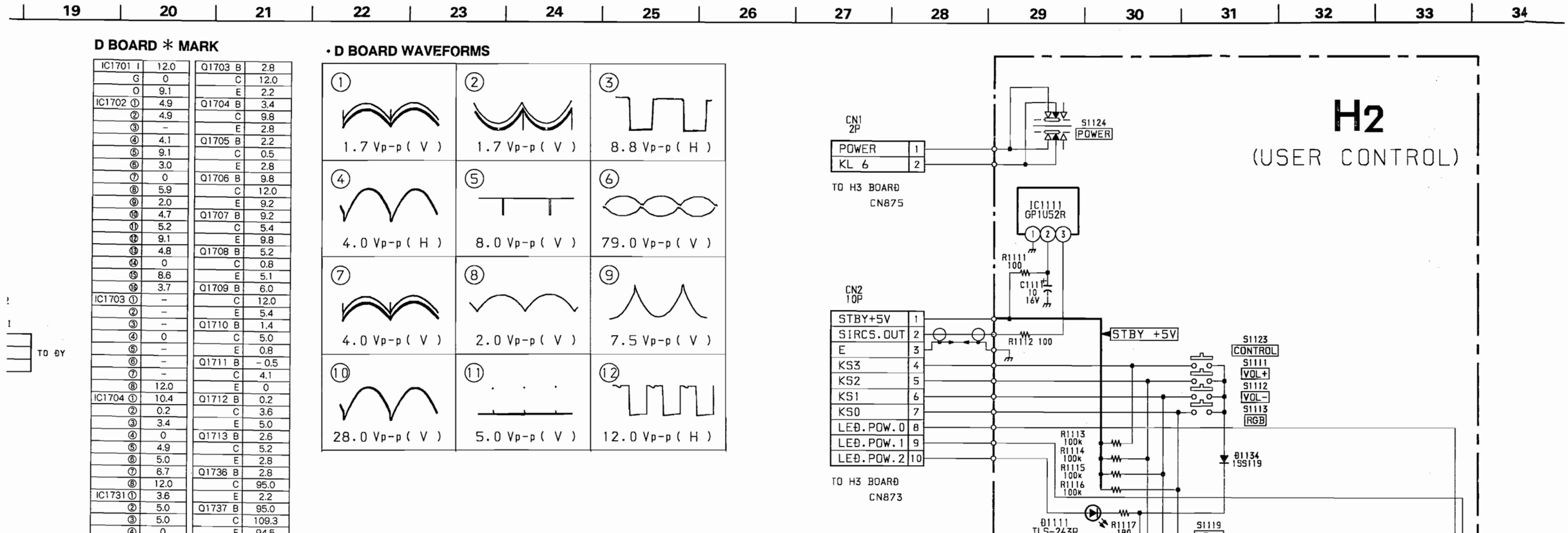

D BOARD ✻ MARK

IC1701	I	12.0	Q1703	B	2.8
	G	0		C	12.0
	O	9.1		E	2.2
IC1702	①	4.9	Q1704	B	3.4
	②	4.9		C	9.8
	③	–		E	2.8
	④	4.1	Q1705	B	2.2
	⑤	9.1		C	0.5
	⑥	3.0		E	2.8
	⑦	0	Q1706	B	9.8
	⑧	5.9		C	12.0
	⑨	2.0		E	9.2
	⑩	4.7	Q1707	B	9.2
	⑪	5.2		C	5.4
	⑫	9.1		E	9.8
	⑬	4.8	Q1708	B	5.2
	⑭	0		C	0.8
	⑮	8.6		E	5.1
	⑯	3.7	Q1709	B	6.0
IC1703	①	–		C	12.0
	②	–		E	5.4
	③	–	Q1710	B	1.4
	④	0		C	5.0
	⑤	–		E	0.8
	⑥	–	Q1711	B	– 0.5
	⑦	–		C	4.1
	⑧	12.0		E	0
IC1704	①	10.4	Q1712	B	0.2
	②	0.2		C	3.6
	③	3.4		E	5.0
	④	0	Q1713	B	2.6
	⑤	4.9		C	5.2
	⑥	5.0		E	2.8
	⑦	6.7	Q1736	B	2.8
	⑧	12.0		C	95.0
IC1731	①	3.6		E	2.2
	②	5.0	Q1737	B	95.0
	③	5.0		C	109.3
	④	0		E	94.5
	⑤	5.0	Q1738	B	11.8
	⑥	5.0		C	1.8
	⑦	5.0		E	12.0
	⑧	12.0	Q1739	B	11.3
IC1733	①	2.1		C	11.8
	②	8.8		E	12.0
	③	7.5	Q1740	B	0.4
	④	0		C	7.3
	⑤	7.5		E	0
	⑥	8.4	Q1743	B	7.3
	⑦	0.4		C	45.3
	⑧	12.0		E	0
Q1702	B	8.9	Q1744	B	6.0
	C	4.4		C	0
	E	9.0		E	5.4

• D BOARD WAVEFORMS

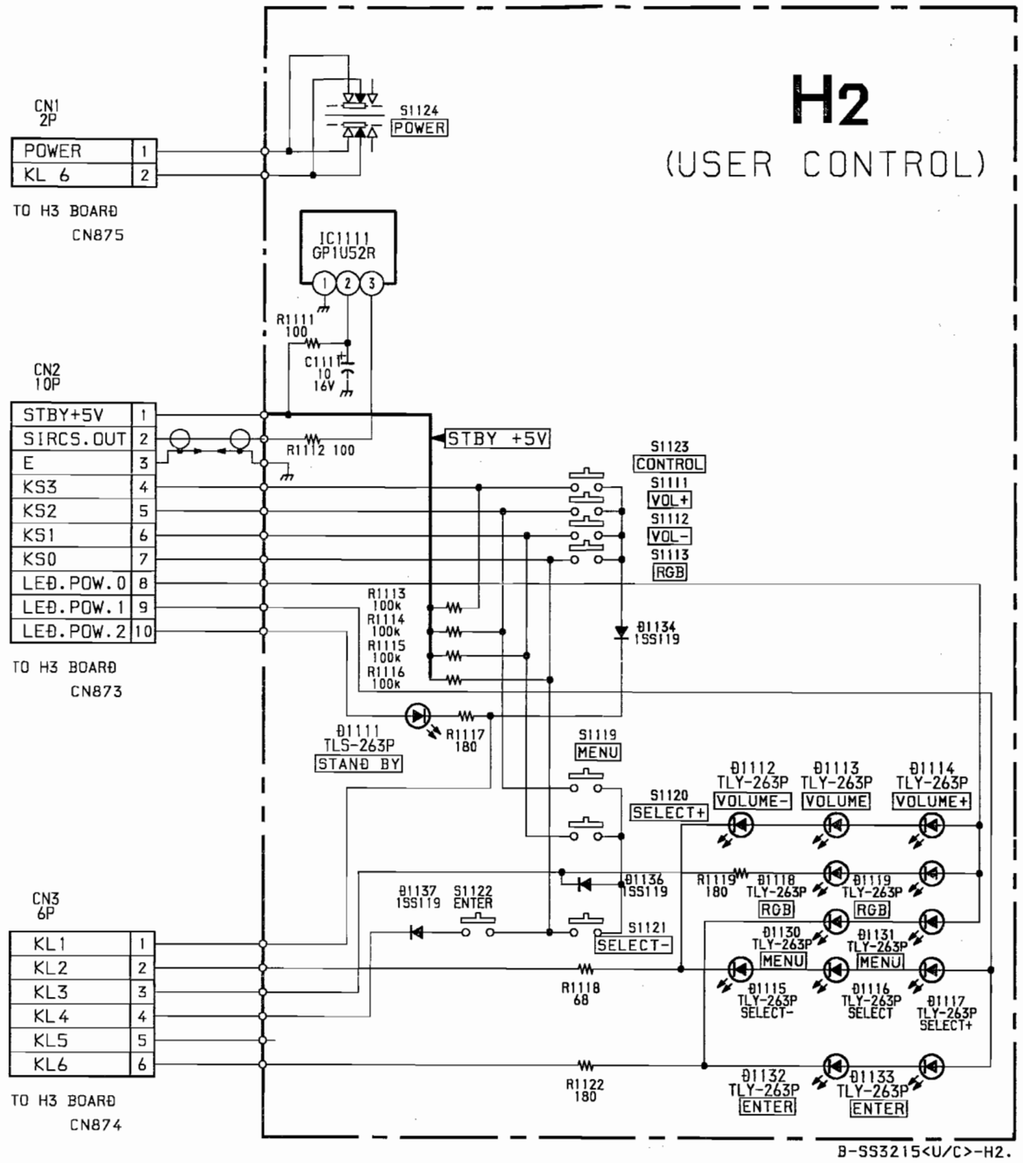

H2 BOARD ✻ MARK

IC1111	①	0
	②	
	③	

Schematic diagrams
← D H2 boards

Schematic diagrams
DA UT boards →

UT (AUDIO CONTROL / VIDEO CONTROL)

CN207
6P
WHT
:S-MICRO

TO UJ BOARD CN104	GND	6
	V1.IN	5
	GND	4
	Y1.IN	3
	GND	2
	C1.IN	1

CN201
18P
BLK
:HINGE-P

	V1.IN	1
	V1.IN	2
	Y1.IN	3
	GND	4
	C1.IN	5
	S-SW1	6
	V2.IN	7
	GND	8
TO UJ BOARD CN101	Y2.IN	9
	GND	10
	C2.IN	11
	S-SW2	12
		13
		14
		15
		16
	RGB1/2	17
	RGB1/2	18

UT BOARD * MARK

IC204 ①	0
②	6.7
③	8.6
④	8.6
⑤	8.5
⑥	6.0
⑦	2.6
⑧	1.3
⑨	5.2
⑩	5.2
⑪	0
⑫	2.6
⑬	2.6
⑭	6.0
⑮	6.0
⑯	8.5
⑰	8.6
⑱	8.6
⑲	6.7
⑳	12.0
IC205 ①	
②	
③	7.0
④	4.7
⑤	4.7
⑥	1.8
⑦	2.1
⑧	0
⑨	
⑩	
⑪	9.0
⑫	0
⑬	0
⑭	4.9
⑮	4.9
⑯	9.0

CN202
18P
BLK
:HINGE-P

	R	1
	R	2
	GND	3
	G	4
	GND	5
	B	6
	GND	7
	EXT.H	8
TO UJ BOARD CN102	EXT.V	9
	+9V	10
	L1.IN	11
	R1.IN	12
	GND	13
	L2.IN	14
	R2.IN	15
	L3.IN	16
	R3.IN	17
	R3.IN	18

CN20
18P
:BTOE

1	B/W
2	SECAM
3	4.43/3
4	H.BLK
5	C.SYN
6	GND
7	SUB PI
8	SUB BR
9	GND
10	GND
11	R.OUT
12	L.OUT
13	GND
14	+5V
15	+5V
16	+9V
17	+12V
18	GND

CN20
18P
:BTOB

1	C.OUT
2	GND
3	Y.OUT
4	SY.SE
5	SECAM.
6	GND
7	SDA
8	SCL
9	+9V
10	EXT.V
11	EXT.H
12	GND
13	B
14	GND
15	G
16	GND
17	R
18	GND

IC204
TA8184P
AUDIO CONTROL

IC205
CXA1315M
VIDEO CONTROL

B-SS3215<U/C>-UT.

DA BOARD * MARK

IC2502 ①	- 4.8	IC2508 ①	4.3
②	0.3	②	7.7
③	- 0.2	③	8.7
④	- 7.0	④	0
⑤	4.8	⑤	2.2
⑥	- 1.5	⑥	0.7
⑦	8.2	⑦	4.4
⑧	12.0	⑧	24.2
IC2503 ①	2.3	Q2510 B	6.5
②	6.0	C	- 4.8
③	6.1	E	7.2
④	- 7.0	Q2511 B	8.0
⑤	0.3	C	- 5.2
⑥	2.1	E	8.6
⑦	- 5.2	Q2512 B	0
⑧	12.0	C	0.2
IC2504 ①	31.0	E	0
②	8.7	Q2513 B	- 3.6
③	0	C	5.8
④		E	0
⑤		Q2514 B	2.6
⑥	30.8	C	12.0
⑦	9.0	E	2.8
⑧	0	Q2515 B	5.8
IC2505 ①	9.3	C	12.0
②	7.2	E	- 6.0
③	7.2	Q2517 B	9.6
④	0	C	12.0
⑤	8.9	E	9.4
⑥	8.9	Q2518 B	9.6
⑦	3.2	C	0
⑧	12.0	E	9.4
IC2506 ①	10.8	Q2519 B	0.7
②	10.8	C	0.2
③	10.4	E	0
④	0	Q2520 B	114.6
⑤	0	C	115.2
⑥	--	E	115.2
⑦	--	Q2523 B	0
⑧	24.2	C	0
IC2507 ①	9.6	E	0.4
②	2.2	Q2530 B	16.4
③	3.1	C	0.3
④	0	E	16.0
⑤	0	Q2531 B	11.7
⑥		C	11.7
⑦		E	12.0
⑧	12.0		

• DA BOARD WAVEFORMS

① 20.0 Vp-p (H)	② 15.0 Vp-p (H)
③ 12.0 Vp-p (H)	④ 20.0 Vp-p (H)

DA BOARD * MARK

IC2502 ①	− 4.8	IC2508 ①	4.3
②	0.3	②	7.7
③	− 0.2	③	8.7
④	− 7.0	④	0
⑤	4.8	⑤	2.2
⑥	− 1.5	⑥	0.7
⑦	8.2	⑦	4.4
⑧	12.0	⑧	24.2
IC2503 ①	2.3	Q2510 B	6.5
②	6.0	C	− 4.8
③	6.1	E	7.2
④	− 7.0	Q2511 B	8.0
⑤	0.3	C	− 5.2
⑥	2.1	E	8.6
⑦	− 5.2	Q2512 B	0
⑧	12.0	C	0.2
IC2504 ①	31.0	E	0
②	8.7	Q2513 B	− 3.6
③	0	C	5.8
④		E	0
⑤		Q2514 B	2.6
⑥	30.8	C	12.0
⑦	9.0	E	2.8
⑧	0	Q2515 B	5.8
IC2505 ①	9.3	C	12.0
②	7.2	E	− 6.0
③	7.2	Q2517 B	9.6
④	0	C	12.0
⑤	8.9	E	9.4
⑥	8.9	Q2518 B	9.6
⑦	3.2	C	0
⑧	12.0	E	9.4
IC2506 ①	10.8	Q2519 B	0.7
②	10.8	C	0.2
③	10.4	E	0
④	0	Q2520 B	114.6
⑤	0	C	115.2
⑥	−	E	115.2
⑦	−	Q2523 B	0
⑧	24.2	C	0
IC2507 ①	9.6	E	0.4
②	2.2	Q2530 B	16.4
③	3.1	C	0.3
④	0	E	16.0
⑤	0	Q2531 B	11.7
⑥		C	11.7
⑦		E	12.0
⑧	12.0		

DA BOARD WAVEFORMS

① 20.0 Vp-p (H)	② 15.0 Vp-p (H)
③ 12.0 Vp-p (H)	④ 20.0 Vp-p (H)

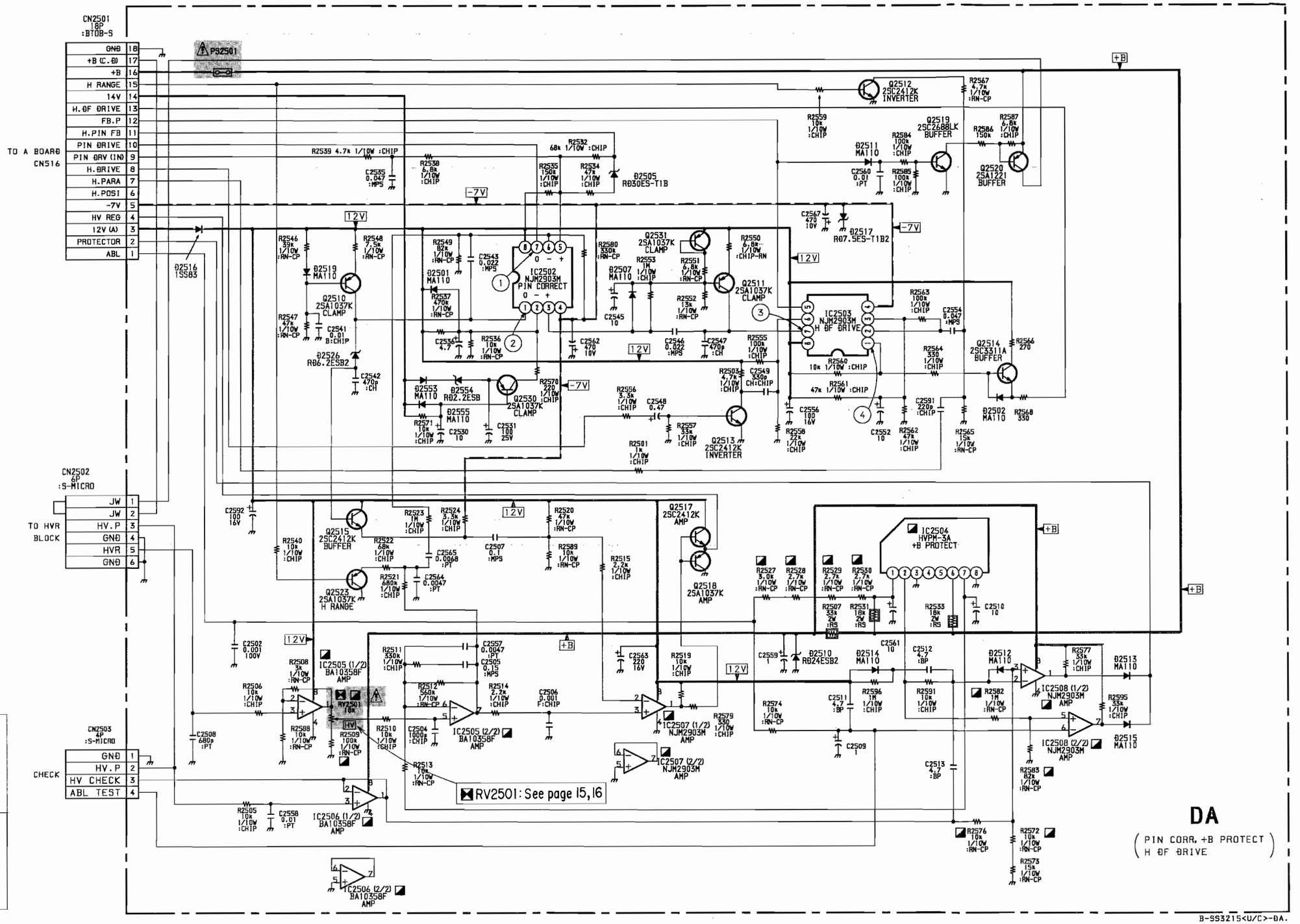

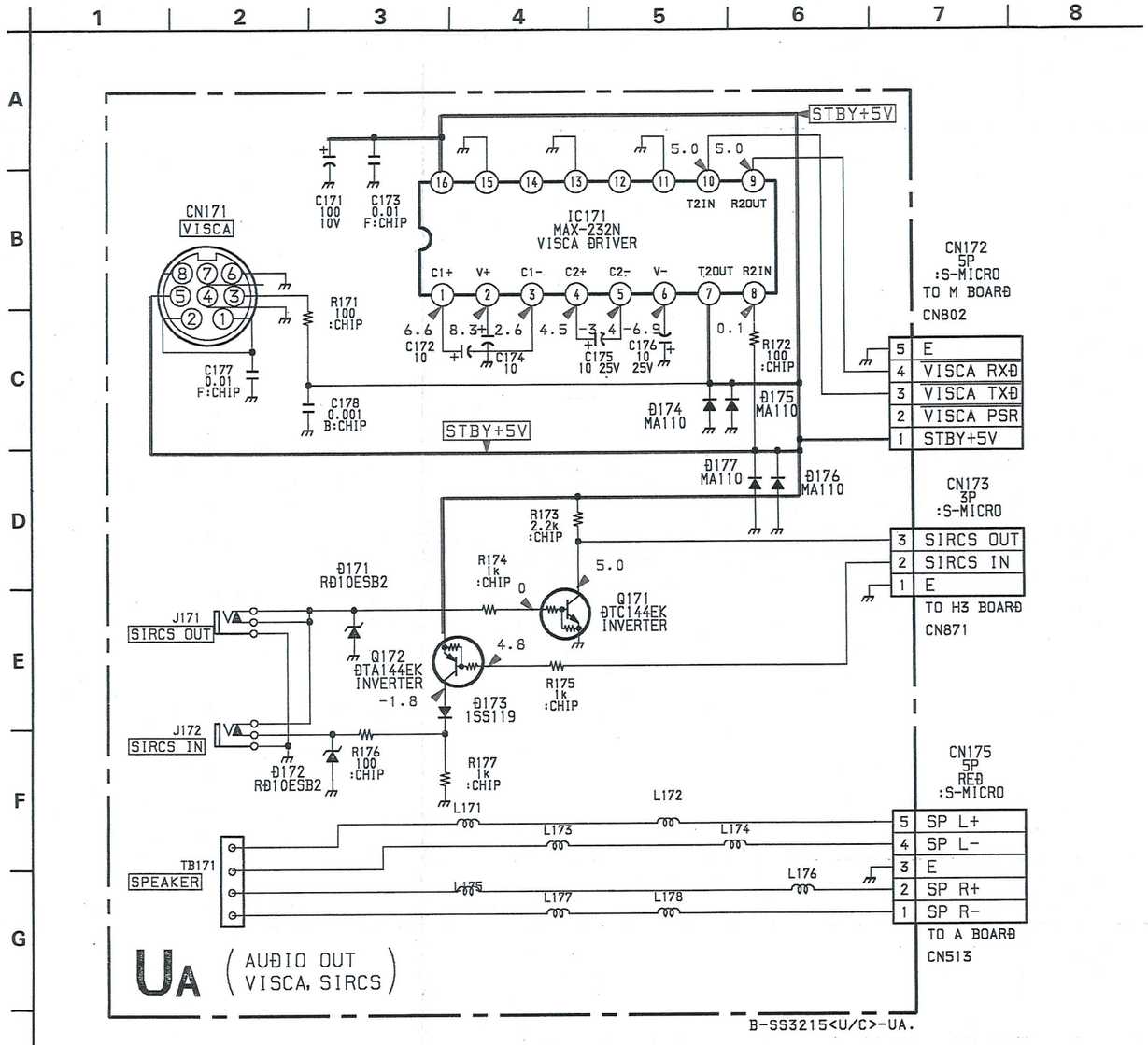

UA BOARD * MARK

IC171 ①	6.6	⑫	
②	8.3	⑬	0
③	2.6	⑭	
④	4.5	⑮	0
⑤	-3.4	⑯	5.0
⑥	-6.9	Q171 B	0
⑦	5.0	C	5.0
⑧	0.1	E	0
⑨	5.0	Q172 B	4.8
⑩	5.0	C	-1.8
⑪	0	E	5.0

DA [PIN CORR, + B PROTECT, H DF DRIVE] **UT** [AUDIO CONTROL, VIDEO CONTROL] **UA** [AUDIO OUT, VISCA, SIRCS]

– **DA BOARD** – 〈Component Side〉

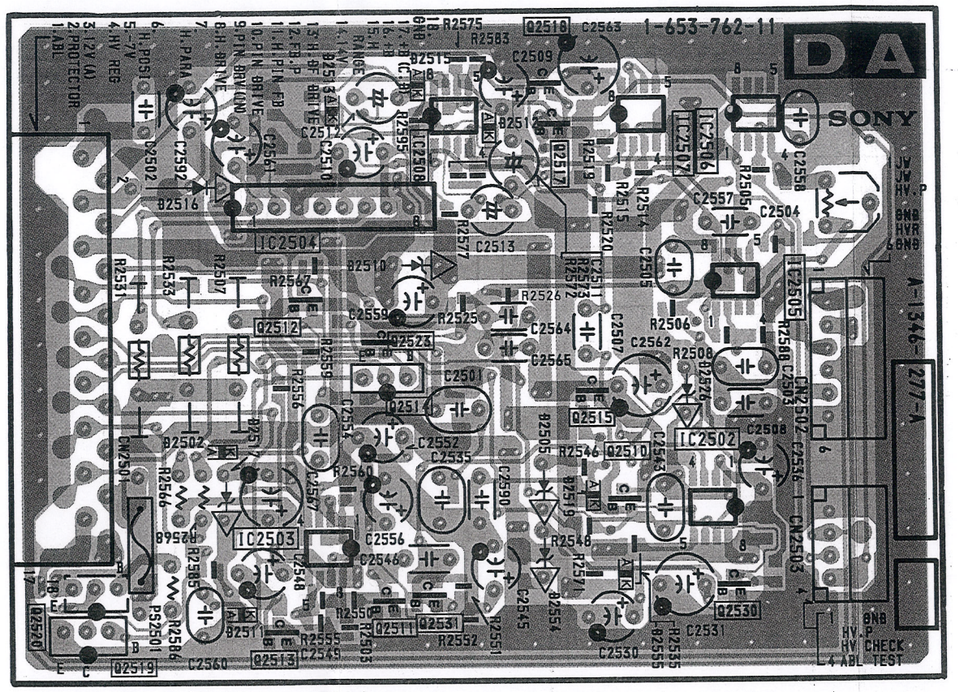

〈Conductor Side〉

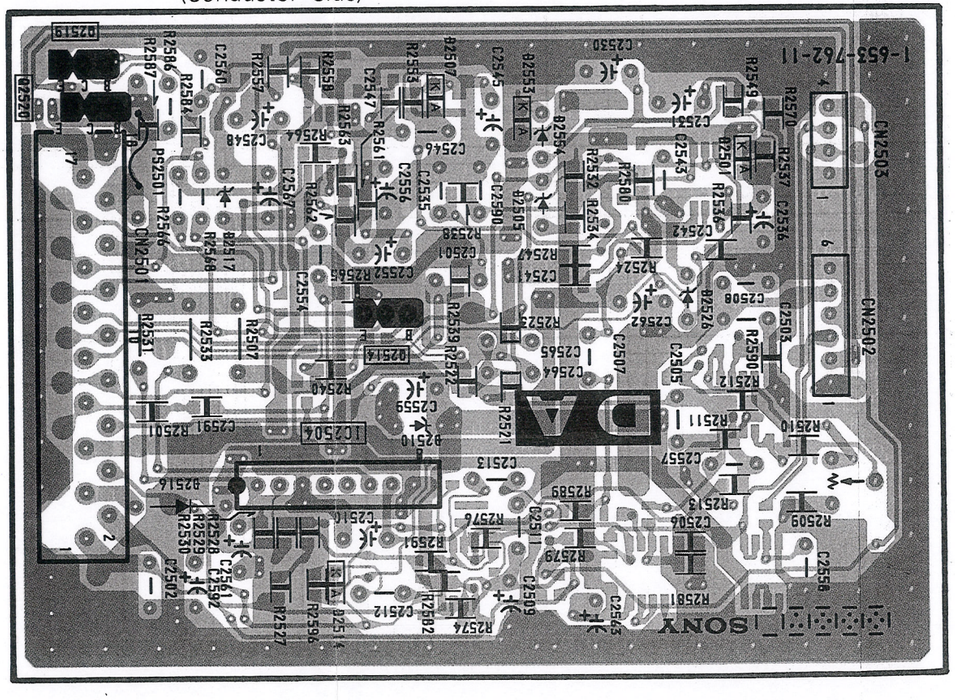

[PIN CORR, + B PROTECT, H DF DRIVE] **UT** [AUDIO CONTROL, VIDEO CONTROL] **UA** [AUDIO OUT, VISCA, SIRCS]

ARD – 〈Component Side〉

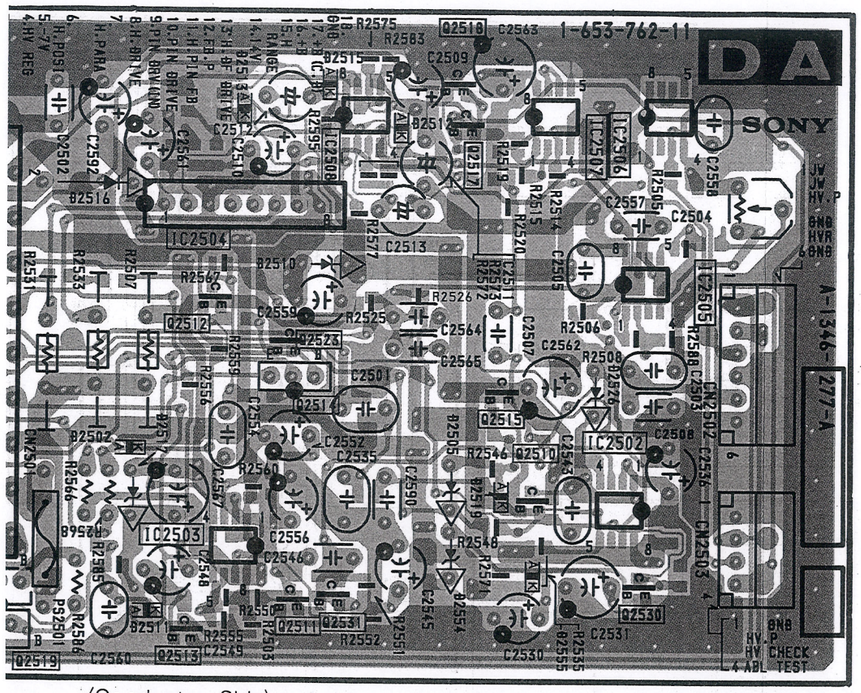

〈Conductor Side〉

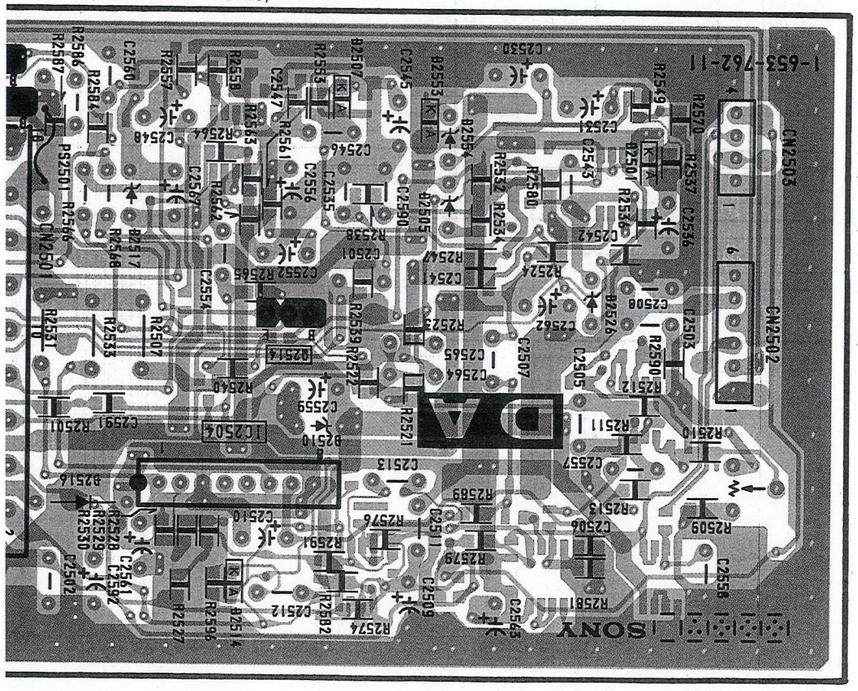

– UT BOARD –

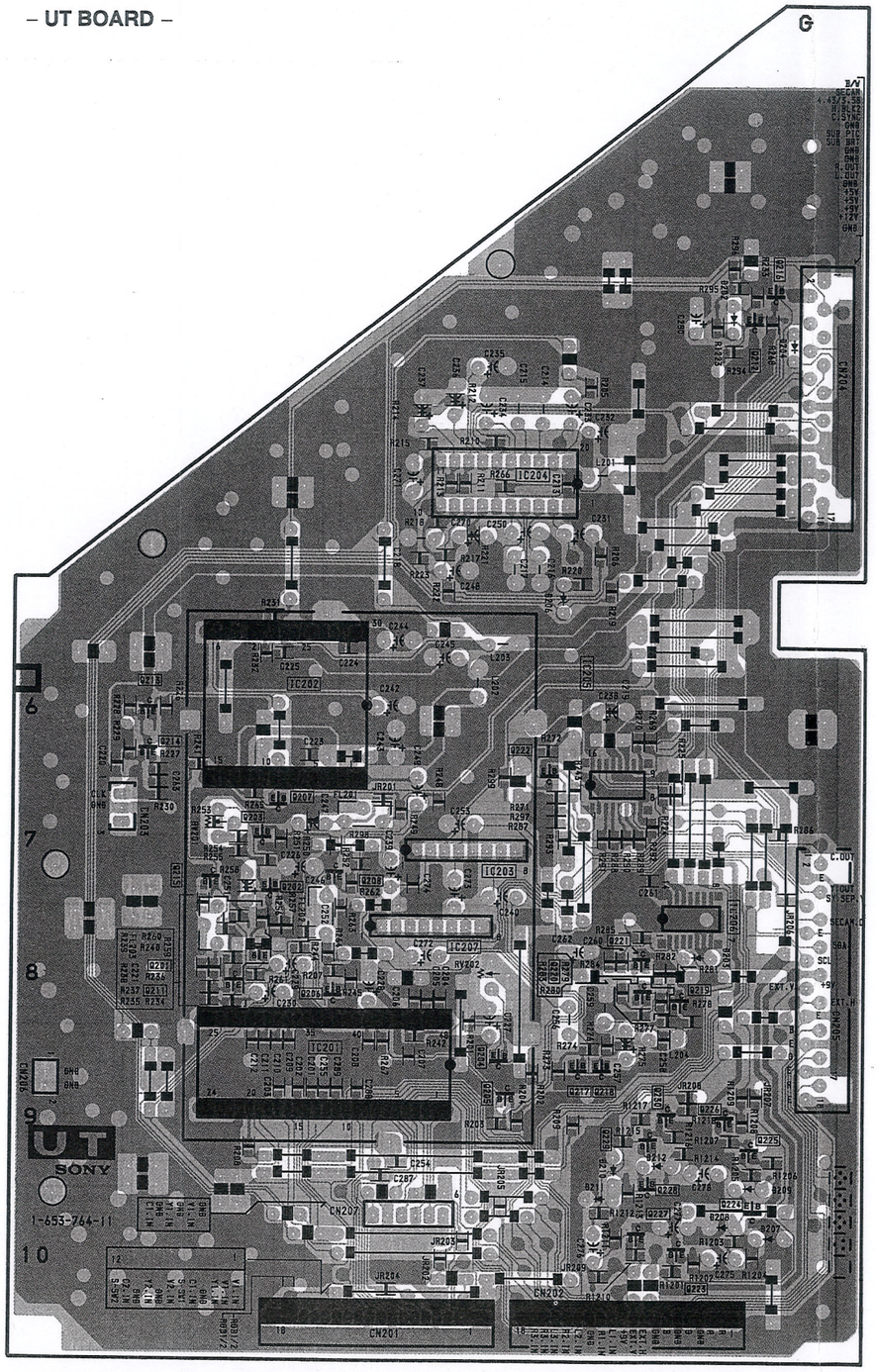

– UA BOARD –

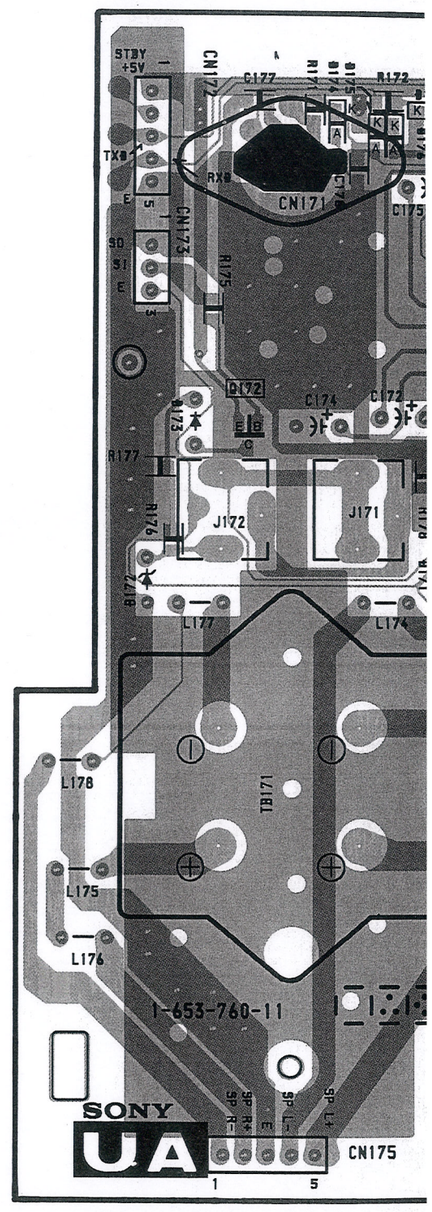

Note :

- : Pattern from the side which enables seeing.
- : Pattern of the rear side.

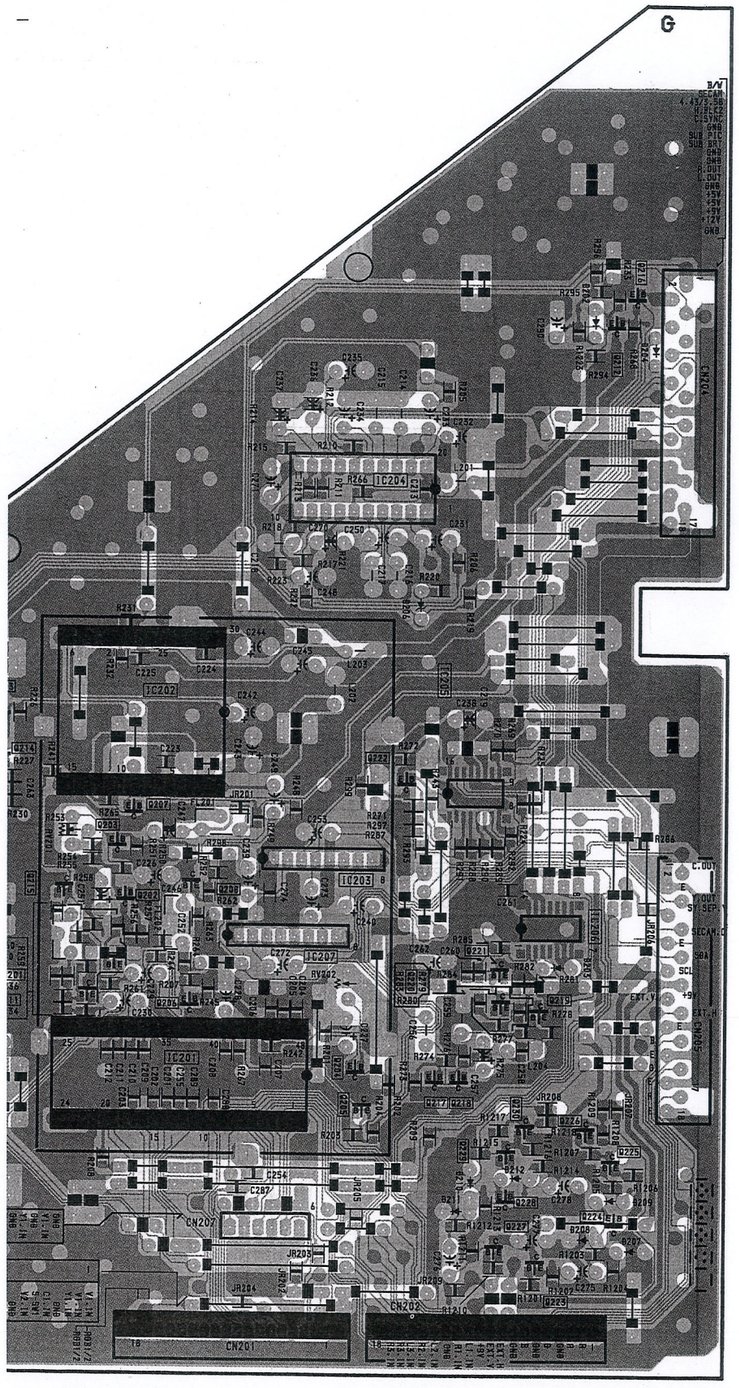

– UA BOARD –

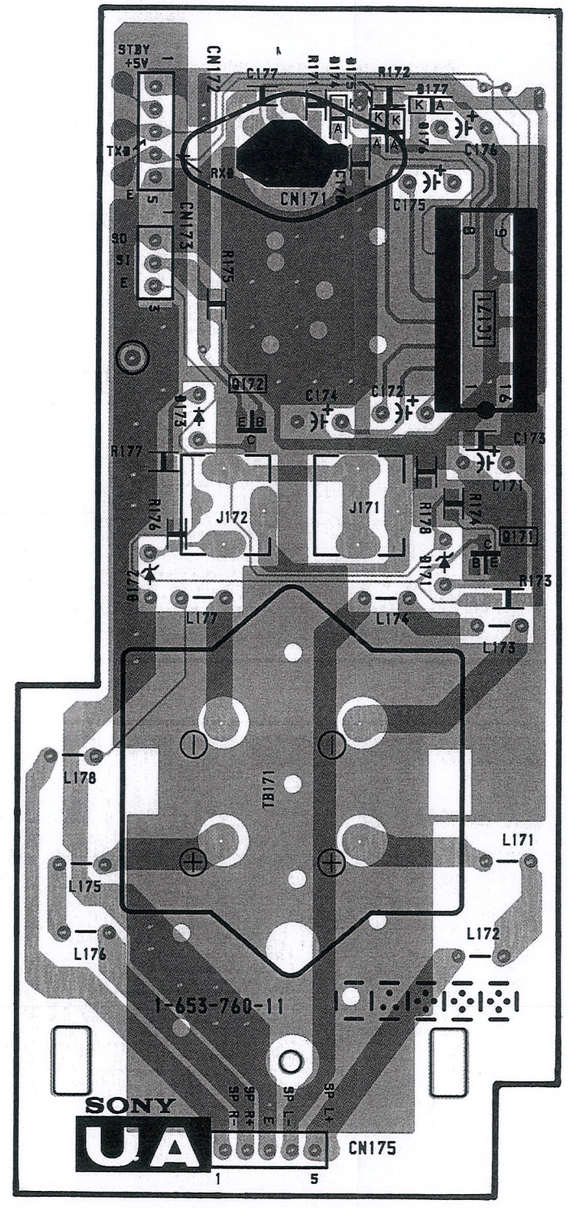

Note :

- : Pattern from the side which enables seeing.
- : Pattern of the rear side.

Schematic diagram
← UA board

Schematic diagram
DX (1/2) board →

DX [GEOMETRIC DISTORTION, REF – SHIFT]

– **DX BOARD** – 〈Component Side〉

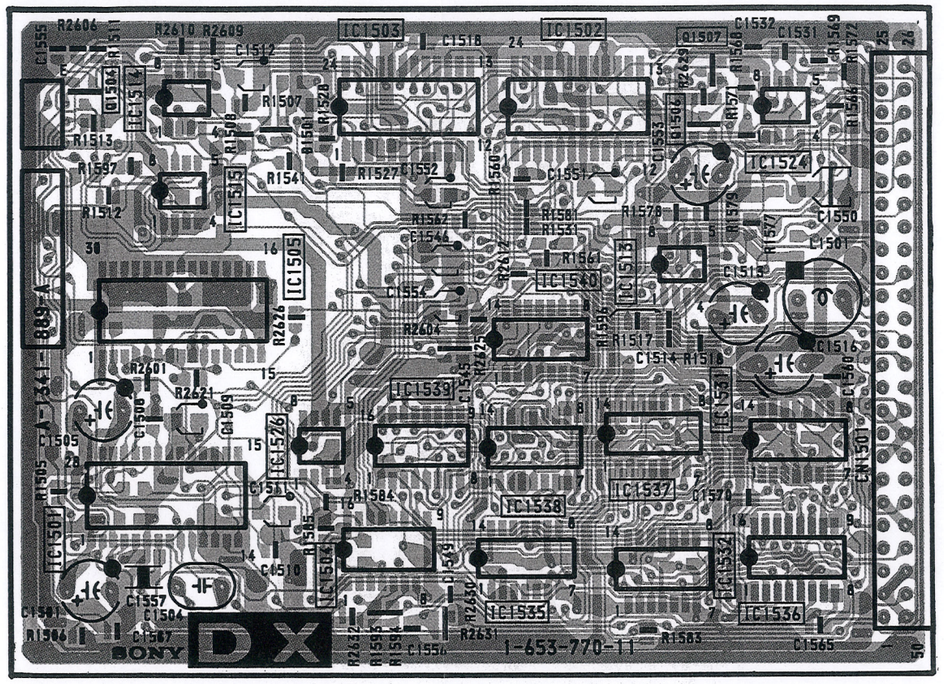

〈Conductor Side〉

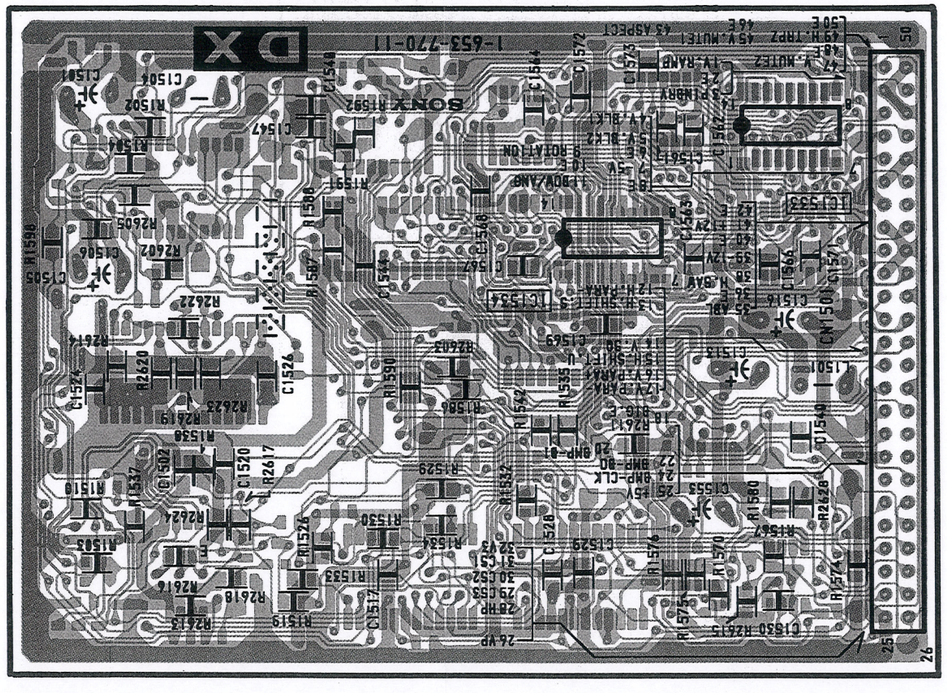

Note :

- : Pattern from the side which enables seeing.
- : Pattern of the rear side.

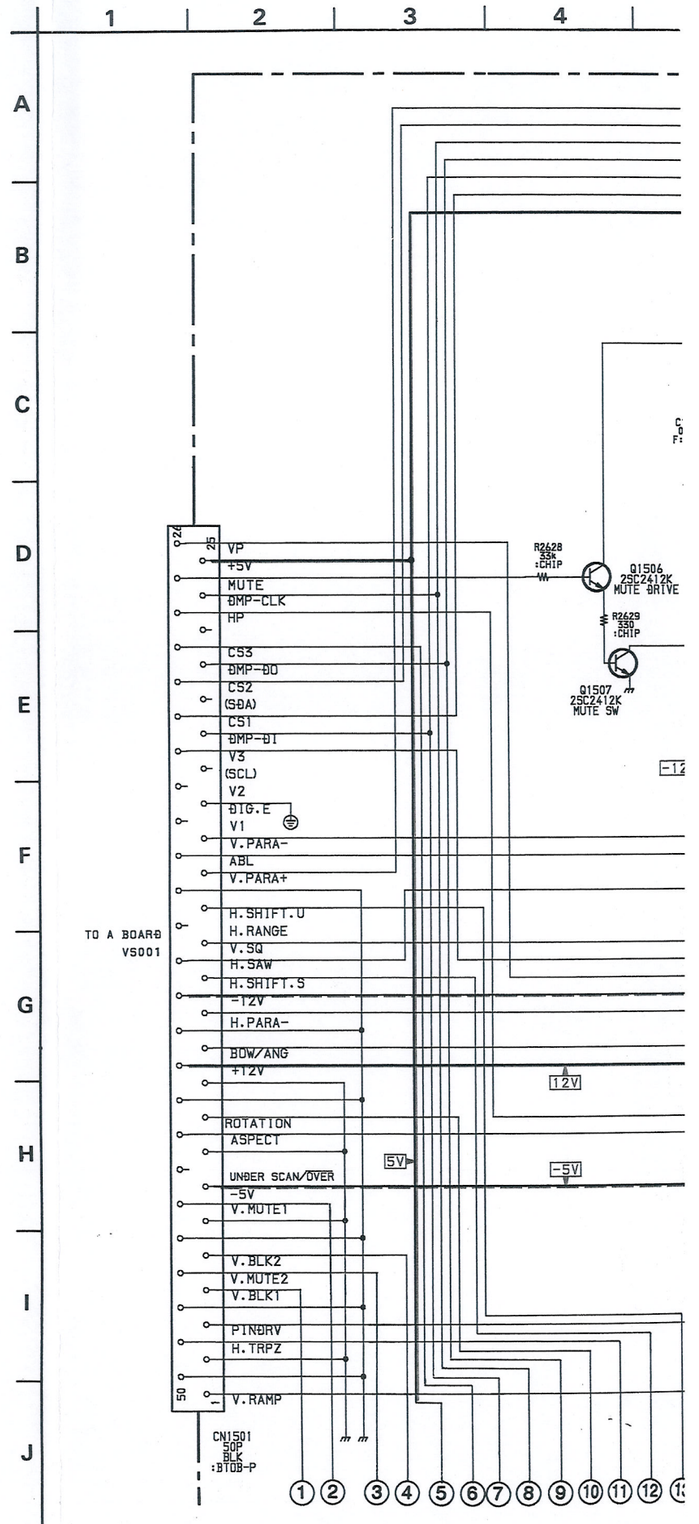

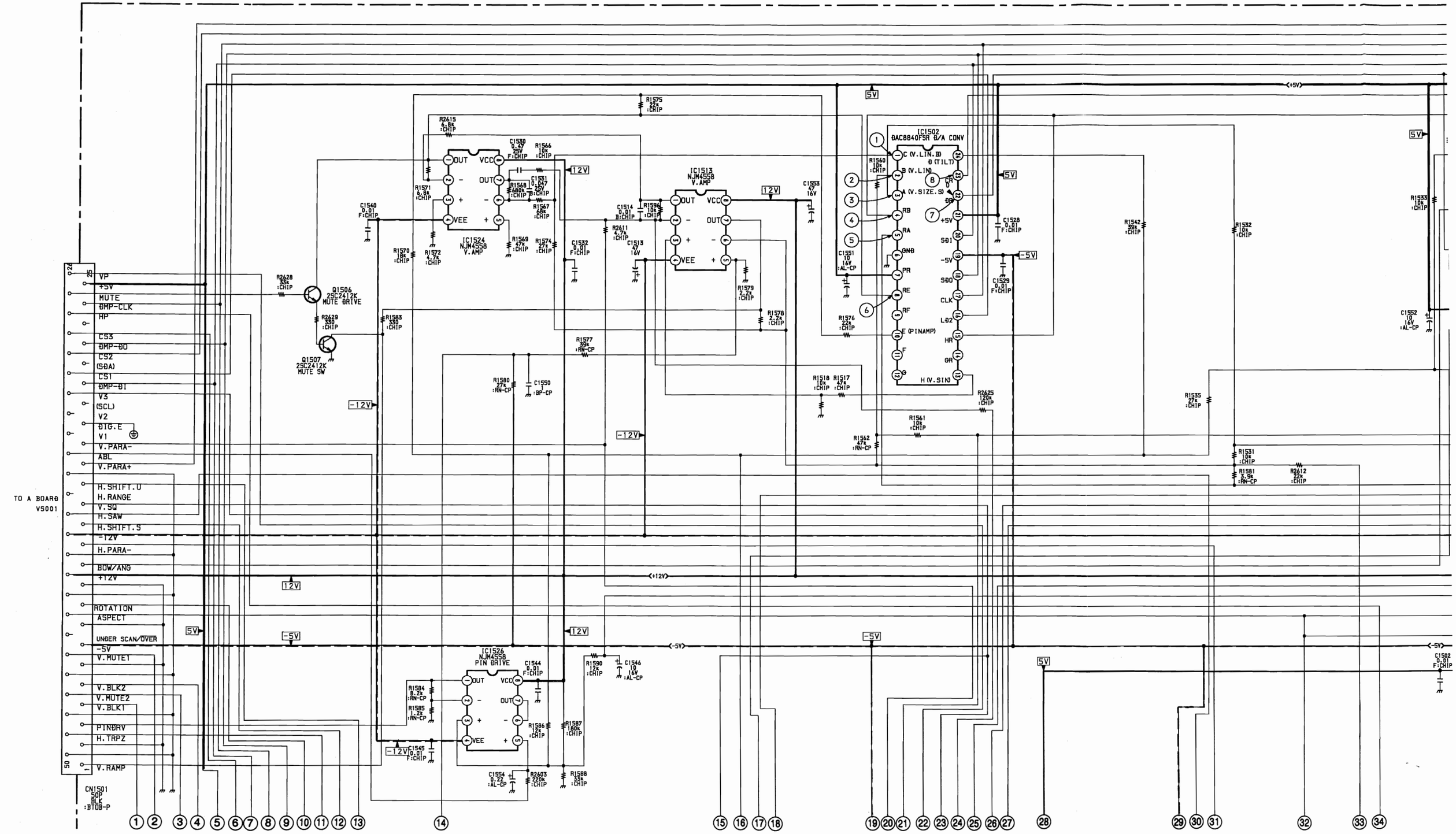

TO A BOARD
VS001
VP
+5V
MUTE
DMP-CLK
HP
CS3
DMP-DO
CS2
(SDA)
CS1
DMP-DI
V3
(SCL)
V2
DIG.E
V1
V.PARA-
ABL
V.PARA+
H.SHIFT.U
H.RANGE
V.SQ
H.SAW
H.SHIFT.S
-12V
H.PARA-
BOW/ANG
+12V
ROTATION
ASPECT
UNDER SCAN/OVER
-5V
V.MUTE1
V.BLK2
V.MUTE2
V.BLK1
PINDRV
H.TRPZ
V.RAMP
CN1501
50P
BLK
:BTOB-P
Q1506
2SC2412K
MUTE DRIVE
Q1507
2SC2412K
MUTE SW
IC1524
NJM4558
V.AMP
IC1513
NJM4558
V.AMP
IC1502
DAC8840FSR D/A CONV
C (V.LIN.B)
D (TILT)
B (V.LIN)
A (V.SIZE.S)
RB
RA
GND
PR
RE
RF
E (PINAMP)
F
G
H (V.SIN)
CR
DR
+5V
SDI
-5V
SDO
CLK
LD2
HR
GR
IC1526
NJM4558
PIN DRIVE
OUT
VCC
VEE

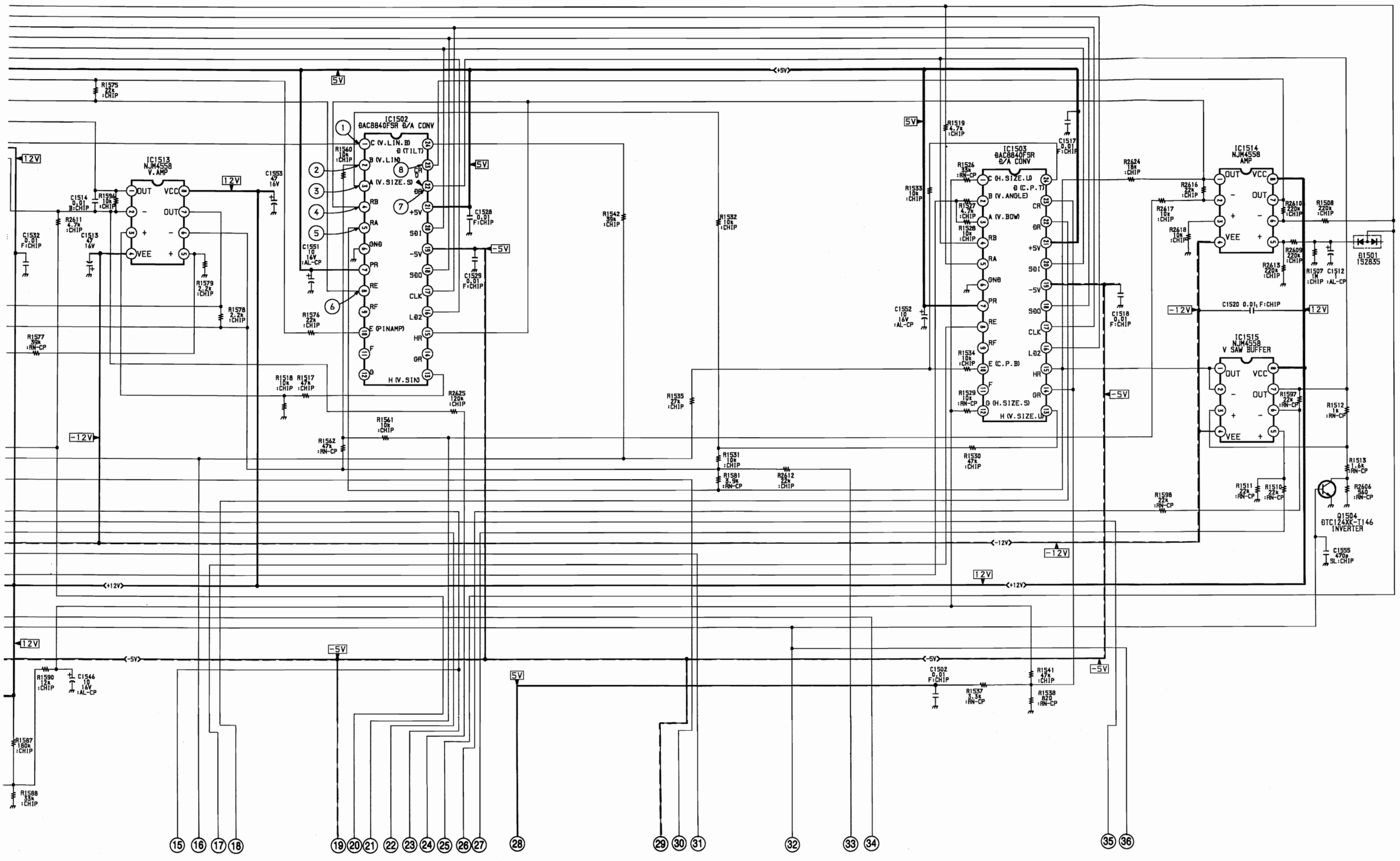
IC1513
NJM4558
V.AMP
IC1502
BAC8840FSR D/A CONV
IC1503
BAC8840FSR
D/A CONV
IC1514
NJM4558
AMP
IC1515
NJM4558
V SAW BUFFER
Q1504
DTC124XK-T146
INVERTER
A1501
1S2835
12V
-12V
5V
-5V
+5V
+12V
R1575 22k :CHIP
R1596 10k :CHIP
C1514 0.01 F:CHIP
R2611 4.7k :CHIP
C1513 47 16V
C1553 47 16V
C1532 0.01 F:CHIP
R1579 2.2k :CHIP
R1578 2.2k :CHIP
R1577 39k :RN-CP
R1540 10k :CHIP
C1551 10 16V :AL-CP
R1576 22k :CHIP
C1528 0.01 F:CHIP
C1529 0.01 F:CHIP
R1542 39k :CHIP
R1532 10k :CHIP
R1518 10k :CHIP
R1517 47k :CHIP
R2625 120k :CHIP
R1561 10k :CHIP
R1562 47k :RN-CP
R1535 27k :CHIP
R1531 10k :CHIP
R1581 3.3k :RN-CP
R2612 22k :CHIP
R1519 4.7k :CHIP
C1517 0.01 F:CHIP
R1533 10k :CHIP
R1524 33k :RN-CP
R1527 4.7k :CHIP
R1528 10k :CHIP
C1552 10 16V :AL-CP
R1534 10k :CHIP
R1529 10k :RN-CP
C1518 0.01 F:CHIP
R1530 47k :CHIP
R2624 18k :CHIP
R2616 22k :CHIP
R2617 10k :CHIP
R2618 10k :CHIP
R2610 220k :CHIP
R1508 220k :CHIP
R2609 220k :CHIP
R2613 220k :CHIP
R1507 1k :CHIP
C1512 1 :AL-CP
C1520 0.01 F:CHIP
R1597 22k :RN-CP
R1512 1k :RN-CP
R1598 22k :RN-CP
R1511 22k :RN-CP
R1510 22k :RN-CP
R1513 1.5k :RN-CP
R2606 560 :RN-CP
C1555 470p SL:CHIP
R1590 12k :CHIP
C1546 10 16V :AL-CP
R1587 180k :CHIP
R1588 33k :CHIP
C1502 0.01 F:CHIP
R1537 3.3k :RN-CP
R1541 47k :CHIP
R1538 820 :RN-CP
1 2 3 4 5 6 7 8 9 10 11 12 13 14 15 16 17 18 19 20 21 22 23 24 25 26 27 28 29 30 31 32 33 34 35 36

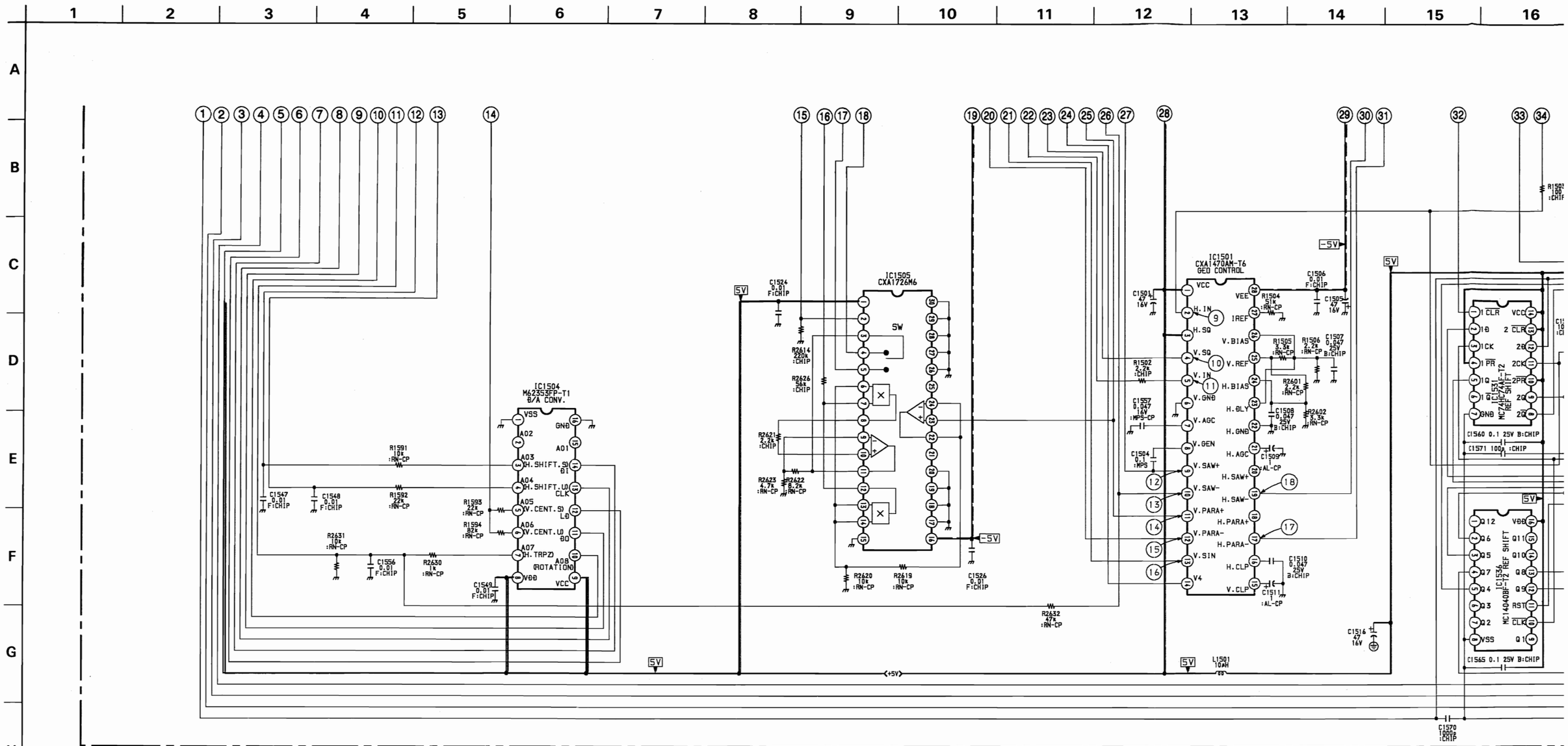
IC1504
M62353FP-T1
8/A CONV.
IC1505
CXA1726M6
IC1501
CXA1470AM-T6
GEO CONTROL
IC1506
MC74HC74AF-T2
REF SHIFT
IC1507
MC14040BF-T2
REF SHIFT
5V
-5V
+5V
SW
H.IN
H.SQ
V.SQ
V.IN
V.GND
V.AGC
V.GEN
V.SAW+
V.SAW-
V.PARA+
V.PARA-
V.SIN
V4
H.BIAS
H.GND
H.AGC
H.SAW+
H.SAW-
H.PARA+
H.PARA-
H.CLP
V.CLP
V.REF
V.BIAS
IREF
VCC
VEE
VSS
GND
VDD
CLK
RST
L1501
10uH

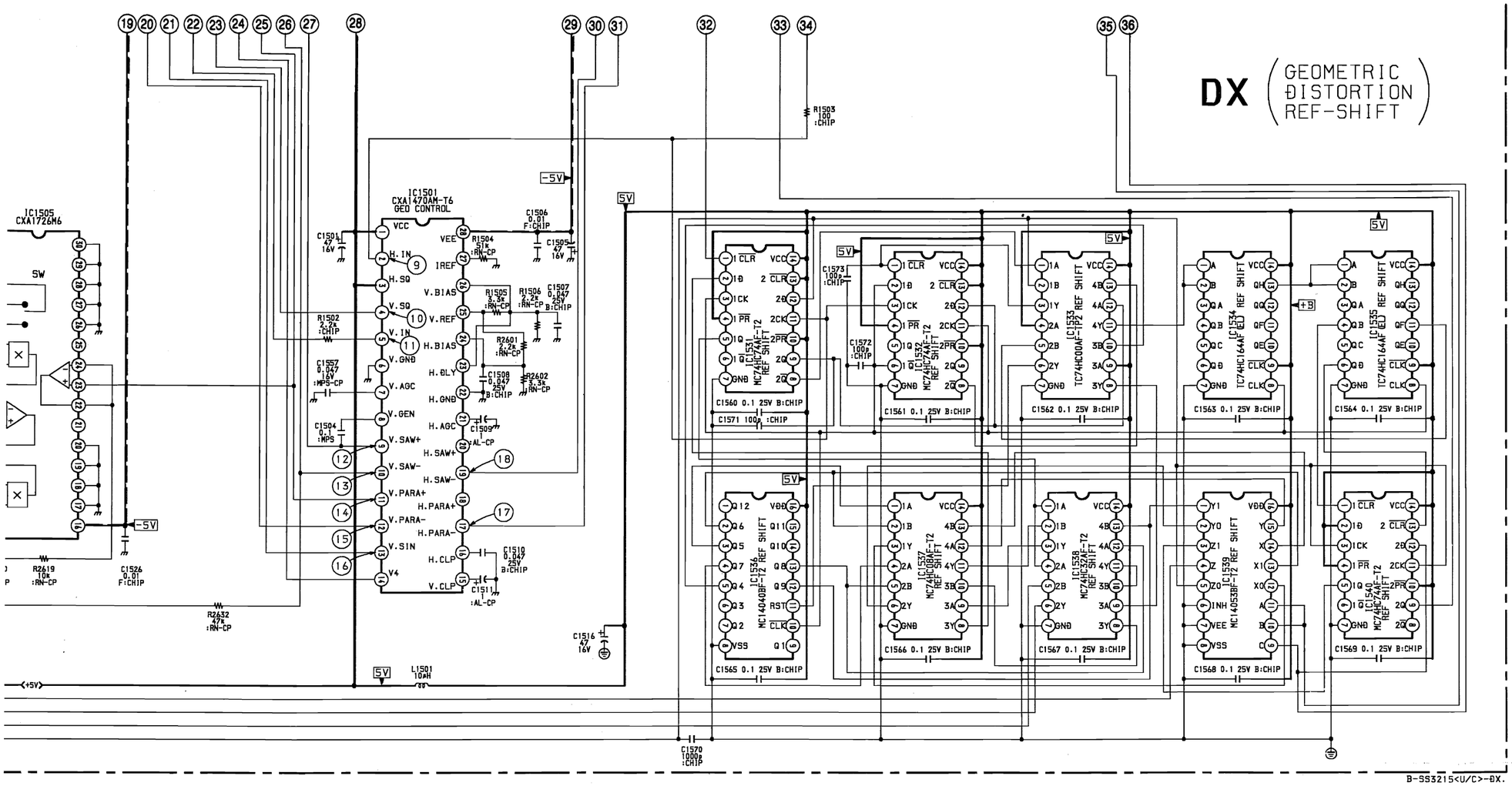

DX BOARD * MARK

IC1501 ①	5.0	②	0	⑮	0
②	0.3	③	0.2	⑯	- 5.0
③	5.0	④	0	⑰	0
④	2.4	⑤	0.5	⑱	0
⑤	0.1	⑥	0	⑲	0
⑥	0	⑦	5.0	⑳	0
⑦	*	⑧	0.3	㉑	
⑧	0	⑨		㉒	0.7
⑨	0	⑩	0	㉓	0.7
⑩	0	⑪		㉔	0.7
⑪	0.7	⑫	0.2	㉕	
⑫	- 0.6	⑬	0	㉖	0
⑬	0.2	⑭	1.0	㉗	0
⑭	- 0.5	⑮	0	㉘	0
⑮	0.9	⑯	0	㉙	0
⑯	0	⑰	4.9	㉚	0
⑰	- 1.6	⑱	*	IC1513 ①	1.5
⑱		⑲	- 5.0	②	0
⑲	0	⑳	4.9	③	0
⑳		㉑	5.0	④	- 12
㉑	1.9	㉒	0.2	⑤	0
㉒	0	㉓	1.0	⑥	0
㉓	1.1	㉔	0	⑦	0
㉔	1.6	IC1504 ①	0	⑧	12.0
㉕	2.6	②		IC1514 ①	- 0.2
㉖	1.1	③	2.2	②	0
㉗	2.5	④	2.5	③	0
㉘	- 0.5	⑤	2.6	④	- 12
IC1502 ①	0.2	⑥	2.5	⑤	0.8
②	0	⑦	2.5	⑥	0.8
③	0	⑧	5.0	⑦	0.8
④	- 0.2	⑨	5.0	⑧	12.0
⑤	0	⑩	2.5	IC1515 ①	0
⑥	0	⑪	*	②	0
⑦	5.0	⑫	0	③	0
⑧	- 1.5	⑬	4.9	④	- 12
⑨		⑭	4.9	⑤	0
⑩	0.2	⑮		⑥	0
⑪		⑯	0	⑦	0
⑫		IC1505 ①	5.0	⑧	12.0
⑬	0.2	②	2.4	IC1524 ①	- 1.5
⑭		③	0.4	②	0
⑮	- 0.3	④	0.2	③	0
⑯	0	⑤	0.3	④	- 12
⑰	4.9	⑥	0.4	⑤	0
⑱	*	⑦	0.3	⑥	0
⑲	- 5.0	⑧	0.2	⑦	- 1.5
⑳	4.9	⑨	0.2	⑧	12.0
㉑	5.0	⑩	0.2	IC1526 ①	4.0
㉒	0	⑪	0.4	②	0.6
㉓	0.9	⑫	0.2	③	0.6
㉔	0	⑬	0.4	④	- 12
IC1503 ①	0	⑭	0.4	⑤	2.2

DX (GEOMETRIC DISTORTION REF-SHIFT)

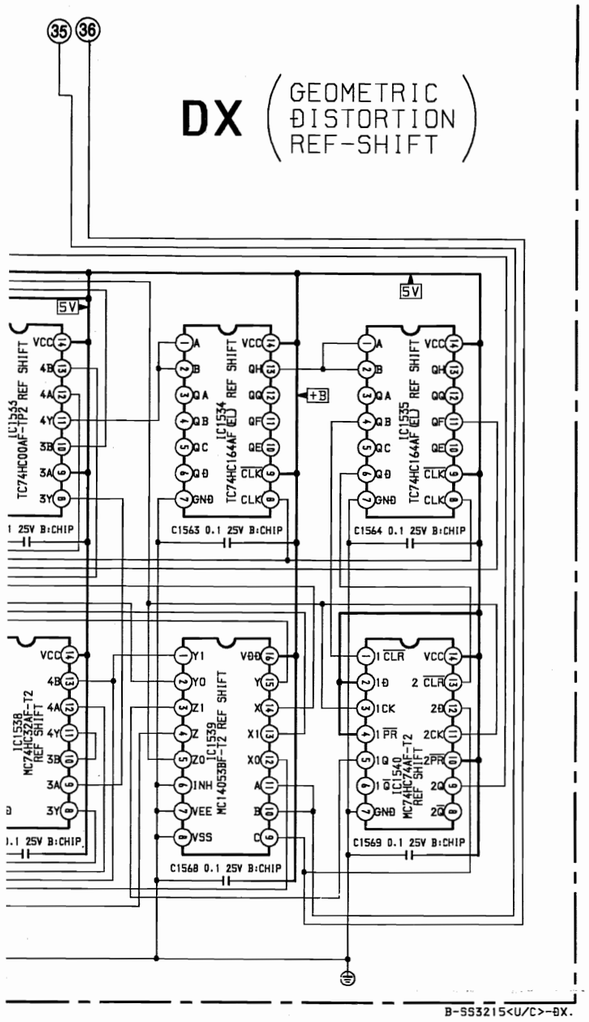

B-SS3215<U/C>-BX.

DX BOARD * MARK

IC1501 ①	5.0	②	0	⑮	0	⑥	2.2	⑨	5.0	④	0				
②	0.3	③	0.2	⑯	- 5.0	⑦	2.2	⑩		⑤	0				
③	5.0	④	0	⑰	0	⑧	12.2	⑪		⑥	0				
④	2.4	⑤	0.5	⑱	0	IC1531 ①	0	⑫		⑦	0				
⑤	0.1	⑥	0	⑲	0	②	0.3	⑬	5.1	⑧	3.9				
⑥	0	⑦	5.0	⑳	0	③	4.5	⑭	5.0	⑨	2.6				
⑦	*	⑧	0.3	㉑		④	5.0	IC1535 ①	5.1	⑩	2.6				
⑧	0	⑨		㉒	0.7	⑤	0	②	5.1	⑪	2.6				
⑨	0	⑩	0	㉓	0.7	⑥		③		⑫	2.6				
⑩	0	⑪		㉔	0.7	⑦	0	④	5.1	⑬	0				
⑪	0.7	⑫	0.2	㉕		⑧	5.0	⑤		⑭	5.0				
⑫	- 0.6	⑬	0	㉖	0	⑨	0	⑥	5.1	IC1539 ①	0				
⑬	0.2	⑭	1.0	㉗	0	⑩	5.0	⑦	0	②	1.4				
⑭	- 0.5	⑮	0	㉘	0	⑪	0.3	⑧	4.6	③	0.3				
⑮	0.9	⑯	0	㉙	0	⑫	0.2	⑨	5.0	④	0.2				
⑯	0	⑰	4.9	㉚	0	⑬	5.0	⑩		⑤	0.2				
⑰	- 1.6	⑱	*	IC1513 ①	1.5	⑭	5.0	⑪	5.1	⑥	0				
⑱		⑲	- 5.0	②	0	IC1532 ①	5.1	⑫		⑦	0				
⑲	0	⑳	4.9	③	0	②	4.6	⑬		⑧	0				
⑳		㉑	5.0	④	- 12.0	③	0.3	⑭	5.0	⑨	0				
㉑	1.9	㉒	0.2	⑤	0	④	5.0	IC1536 ①		⑩	0				
㉒	0	㉓	1.0	⑥	0	⑤		②	2.0	⑪	0				
㉓	1.1	㉔	0	⑦	0	⑥	4.4	③	2.6	⑫	1.3				
㉔	1.6	IC1504 ①	0	⑧	12.0	⑦	0	④	2.6	⑬	2.6				
㉕	2.6	②		IC1514 ①	- 0.2	⑧	5.0	⑤	2.5	⑭	1.3				
㉖	1.1	③	2.2	②	0	⑨		⑥		⑮	1.4				
㉗	2.5	④	2.5	③	0	⑩	5.0	⑦		⑯	5.0				
㉘	- 0.5	⑤	2.6	④	- 12.0	⑪	4.4	⑧	0	IC1540 ①	5.1				
IC1502 ①	0.2	⑥	2.5	⑤	0.8	⑫	0.2	⑨		②	5.0				
②	0	⑦	2.5	⑥	0.8	⑬	5.0	⑩	4.5	③	0.2				
③	0	⑧	5.0	⑦	0.8	⑭	5.0	⑪	0	④	5.0				
④	- 0.2	⑨	5.0	⑧	12.0	IC1533 ①	5.0	⑫	0	⑤	0.3				
⑤	0	⑩	2.5	IC1515 ①	0	②	0.2	⑬	2.6	⑥					
⑥	0	⑪	*	②	0	③	5.1	⑭		⑦	0				
⑦	5.0	⑫	0	③	0	④	5.0	⑮		⑧					
⑧	- 1.5	⑬	4.9	④	- 12.0	⑤	5.1	⑯	5.0	⑨	0				
⑨		⑭	4.9	⑤	0	⑥	0	IC1537 ①	2.6	⑩	0.2				
⑩	0.2	⑮		⑥	0	⑦	0	②	2.6	⑪	0.2				
⑪		⑯	0	⑦	0	⑧	2.6	③	1.3	⑫	0				
⑫		IC1505 ①	5.0	⑧	12.0	⑨	5.0	④	2.6	⑬	5.1				
⑬	0.2	②	2.4	IC1524 ①	- 1.5	⑩	2.6	⑤	2.6	⑭	5.0				
⑭		③	0.4	②	0	⑪	5.1	⑥	1.4	Q1504 B	0				
⑮	- 0.3	④	0.2	③	0	⑫	0.2	⑦	0	C	0				
⑯	0	⑤	0.3	④	- 12.0	⑬	5.0	⑧	0.4	E	0				
⑰	4.9	⑥	0.4	⑤	0	⑭	5.0	⑨	0.4	Q1506 B	- 1.0				
⑱	*	⑦	0.3	⑥	0	IC1534 ①	5.1	⑩	3.9	C	- 1.5				
⑲	- 5.0	⑧	0.2	⑦	- 1.6	②	5.1	⑪	0.4	E	- 1.4				
⑳	4.9	⑨	0.2	⑧	12.0	③		⑫	1.4	Q1507 B	- 1.4				
㉑	5.0	⑩	0.2	IC1526 ①	4.0	④		⑬	1.3	C	0				
㉒	0	⑪	0.4	②	0.6	⑤		⑭	5.0	E	0				
㉓	0.9	⑫	0.2	③	0.6	⑥		IC1538 ①	0						
㉔	0	⑬	0.4	④	- 12.0	⑦	0	②	0.4						
IC1503 ①	0	⑭	0.4	⑤	2.2	⑧	3.6	③	0.4						

• DX BOARD WAVEFORMS

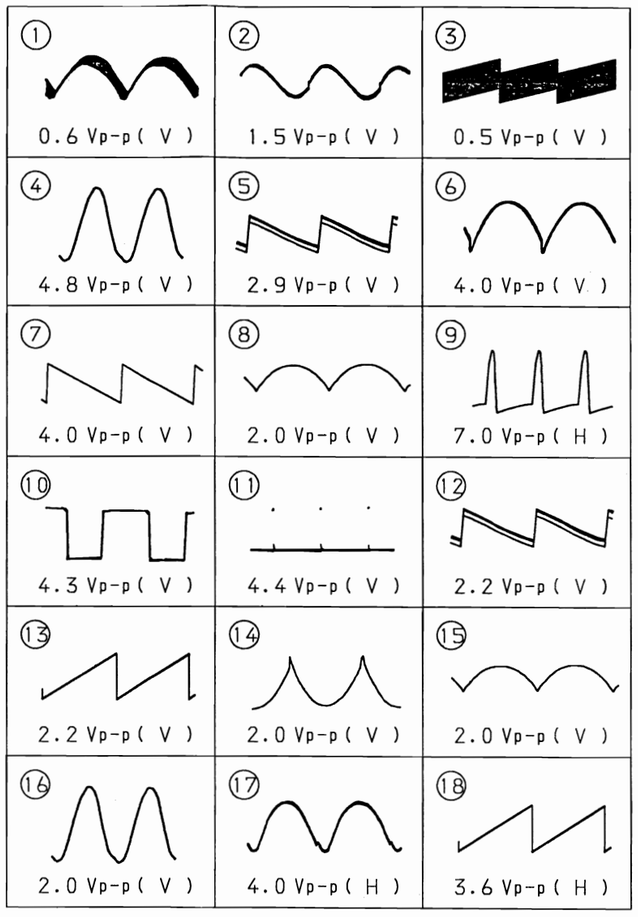

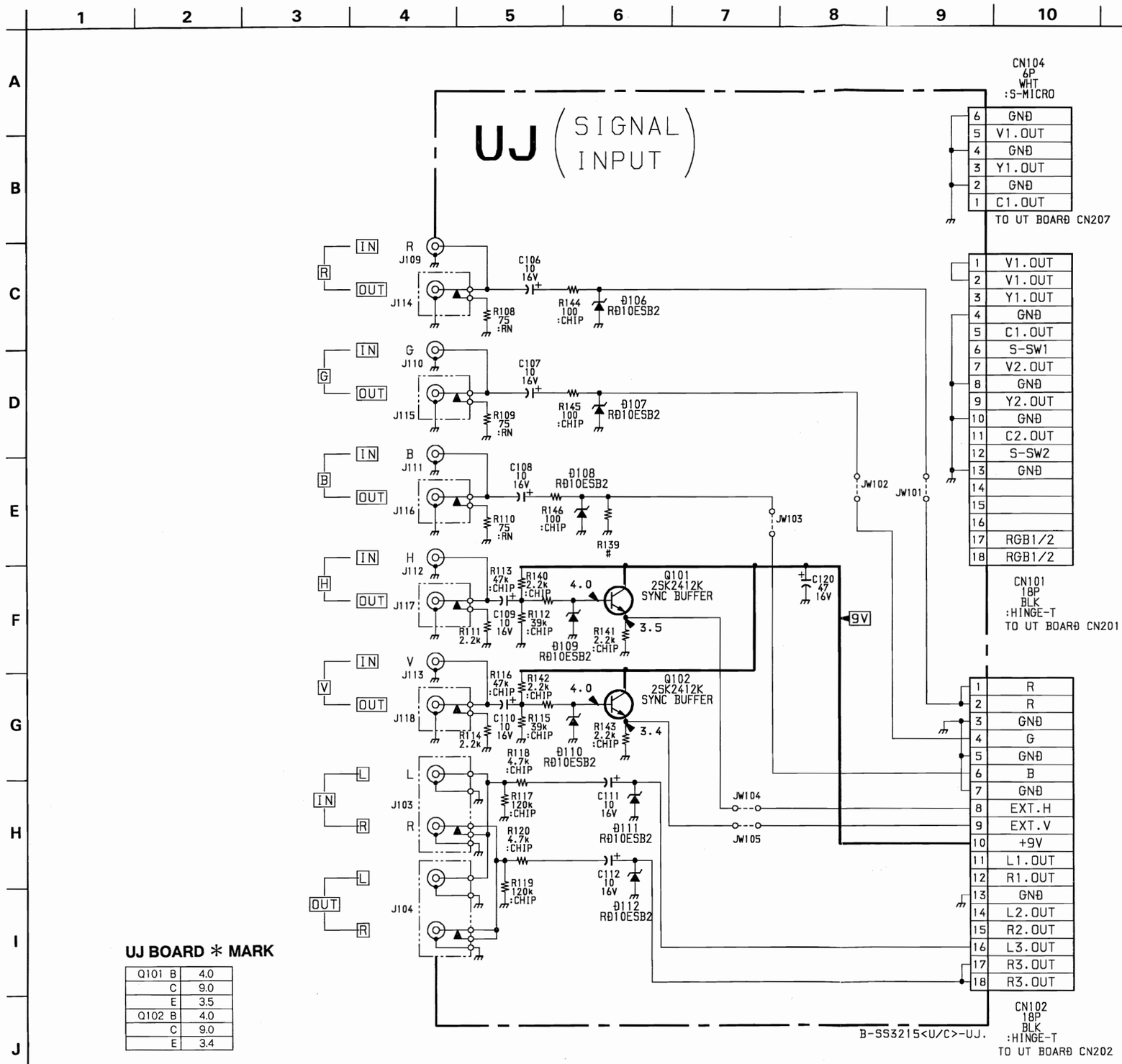

UJ BOARD * MARK

Q101 B	4.0
C	9.0
E	3.5
Q102 B	4.0
C	9.0
E	3.4

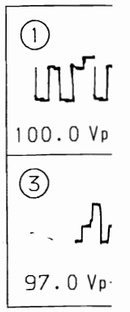

CN104
4P
WHT
:S-MICRO

6	GNÐ
5	V1.OUT
4	GNÐ
3	Y1.OUT
2	GNÐ
1	C1.OUT

TO UT BOARÐ CN207

1	V1.OUT
2	V1.OUT
3	Y1.OUT
4	GNÐ
5	C1.OUT
6	S-SW1
7	V2.OUT
8	GNÐ
9	Y2.OUT
10	GNÐ
11	C2.OUT
12	S-SW2
13	GNÐ
14	
15	
16	
17	RGB1/2
18	RGB1/2

CN101
18P
BLK
:HINGE-T
TO UT BOARÐ CN201

JW102 JW101 JW103

C120 47 16V

9V

1	R
2	R
3	GNÐ
4	G
5	GNÐ
6	B
7	GNÐ
8	EXT.H
9	EXT.V
10	+9V
11	L1.OUT
12	R1.OUT
13	GNÐ
14	L2.OUT
15	R2.OUT
16	L3.OUT
17	R3.OUT
18	R3.OUT

CN102
18P
BLK
:HINGE-T
TO UT BOARÐ CN202

B-SS3215<U/C>-UJ.

C BOARD * MARK

IC701	①	3.2
	②	12.0
	③	3.2
	④	0
	⑤	7.0
	⑥	200
	⑦	115.7
	⑧	123.5
	⑨	114.5
IC702	①	3.2
	②	12.0
	③	3.2
	④	0
	⑤	6.9
	⑥	200
	⑦	116.9
	⑧	128.1
	⑨	116.0
IC703	①	3.2
	②	12.0
	③	3.2
	④	0
	⑤	6.9
	⑥	200
	⑦	128.4
	⑧	126.7
	⑨	127.3
J701	⑦	126.0
	⑧	127.0
	⑨	122.0
Q701	B	6.6
	C	0
	E	0.2
Q702	B	0.6
	C	9.4
	E	0
Q703	B	9.4
	C	0.2
	E	0
Q704	B	5.4
	C	12.0
	E	4.8
Q705	B	5.2
	C	11.1
	E	4.8
Q706	B	11.6
	C	435
	E	11.1

• C BOARD WAVEFORMS

① 100.0 Vp-p (H)

② 103.0 Vp-p (H)

③ 97.0 Vp-p (H)

④ 29.0 Vp-p (H)

CN701
5P
BLK
:S-MICRO

GNÐ	1
R	2
G	3
B	4
GNÐ	5

TO B BOARÐ CN305

CN703
4P
RED
:S-MICRO

V.BLK	1
IK	2
+12V	3
GNÐ	4

TO B BOARÐ CN306

TO A BOAR
T504 FV

200V

12V

RED.OUT

IC701 TDA6111Q VIDEO-OUT

VB 12V VI E IK 200V VF VO VOF

R716 220 1/2W :RC

R719 3.9k

C711 560p 500V B

D702 1SS83 PROTECT

L701 4.7uH :FLR50

R710 1k

C704 33 16V :MT

C701 10 250V :MT

C707 0.01 B

R704 1k

R707 33k 3W :RS

R701 680

SCREEN MIN-MAX 226-898

RV701 110M

J701

H.STAT

GREEN.OUT

IC702 TDA6111Q VIDEO-OUT

R717 220 1/2W :RC

R720 3.9k

R711 1k

R714 180

C712 560p 500V B

D703 1SS83 PROTECT

C702 10 250V :MT

C705 33 16V :MT

R705 1k

R708 33k 3W :RS

R702 680

BLUE.OUT

IC703 TDA6111Q VIDEO-OUT

D701 1SS119 BIAS-DUMP

R722 12k

C710 220 16V :MT

R723 4.7k

C708 0.01 B

C709 0.01 B

R712 1k

R715 180

C713 560p 500V B

R718 220 1/2W :RC

R721 3.9k

D704 1SS83 PROTECT

L703 4.7uH :FLR50

R709 33k 5W :RS

C703 10 250V :MT

C706 33 16V :MT

R706 1k

R703 680

(+12V)

R726 10k

R725 10k

Q701 2SA1309A IK-BUFF

R727 100

R728 1k

Q702 DTC144ES IK-SW

Q703 DTC144ES IK-SW

R724 33k

D705 RD9.1ESB PROTECT

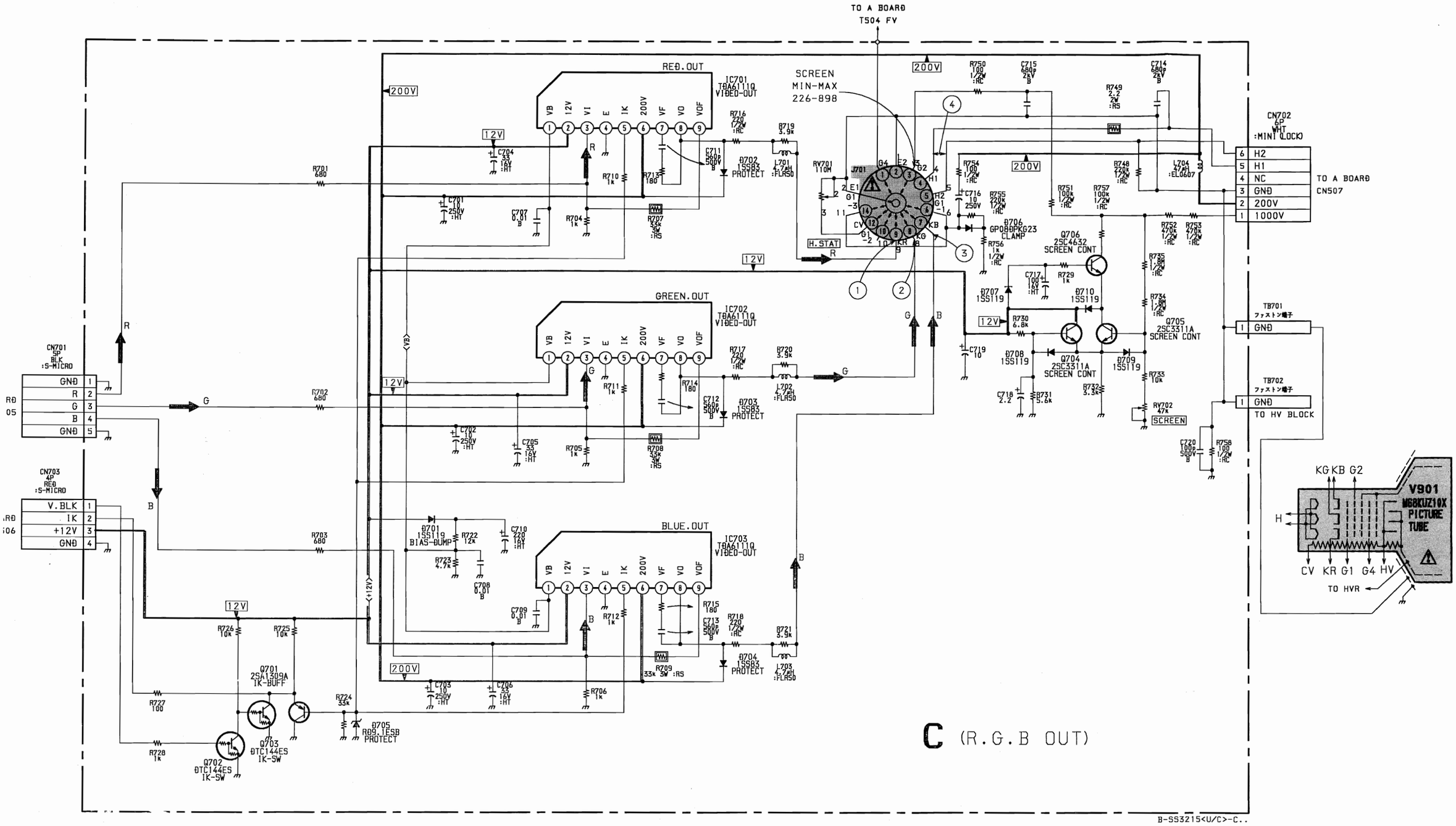
TO A BOARD
T504 FV
RED.OUT
GREEN.OUT
BLUE.OUT
IC701 TDA6111Q VIDEO-OUT
IC702 TDA6111Q VIDEO-OUT
IC703 TDA6111Q VIDEO-OUT
VB 12V VI E IK 200V VF VO VOF
200V
12V
SCREEN MIN-MAX 226-898
H.STAT
D702 1SS83 PROTECT
D703 1SS83 PROTECT
D704 1SS83 PROTECT
D705 RD9.1ESB PROTECT
D701 1SS119 BIAS-DUMP
D706 GP08DPG23 CLAMP
D707 1SS119
D708 1SS119
D709 1SS119
D710 1SS119
Q701 2SA1309A IK-BUFF
Q702 DTC144ES IK-5W
Q703 DTC144ES IK-5W
Q704 2SC3311A SCREEN CONT
Q705 2SC3311A SCREEN CONT
Q706 2SC4632 SCREEN CONT
L701 4.7uH :FLR50
L702 4.7uH :FLR50
L703 4.7uH :FLR50
L704 47uH :ELG607
RV701 110M
RV702 47K SCREEN
J701
CN701 5P BLK :S-MICRO
GND 1
R 2
G 3
B 4
GND 5
CN703 4P RED :S-MICRO
V.BLK 1
IK 2
+12V 3
GND 4
CN702 6P WHT :MINI LOCK
6 H2
5 H1
4 NC
3 GND
2 200V
1 1000V
TO A BOARD CN507
TB701 ファストン端子 GND
TB702 ファストン端子 GND
TO HV BLOCK
V901 M68KUZ10X PICTURE TUBE
KG KB G2
H
CV KR G1 G4 HV
TO HVR
C (R.G.B OUT)
B-SS3215<U/C>-C..

C [R. G. B. OUT] **UJ** [SIGNAL INPUT]

– C BOARD –

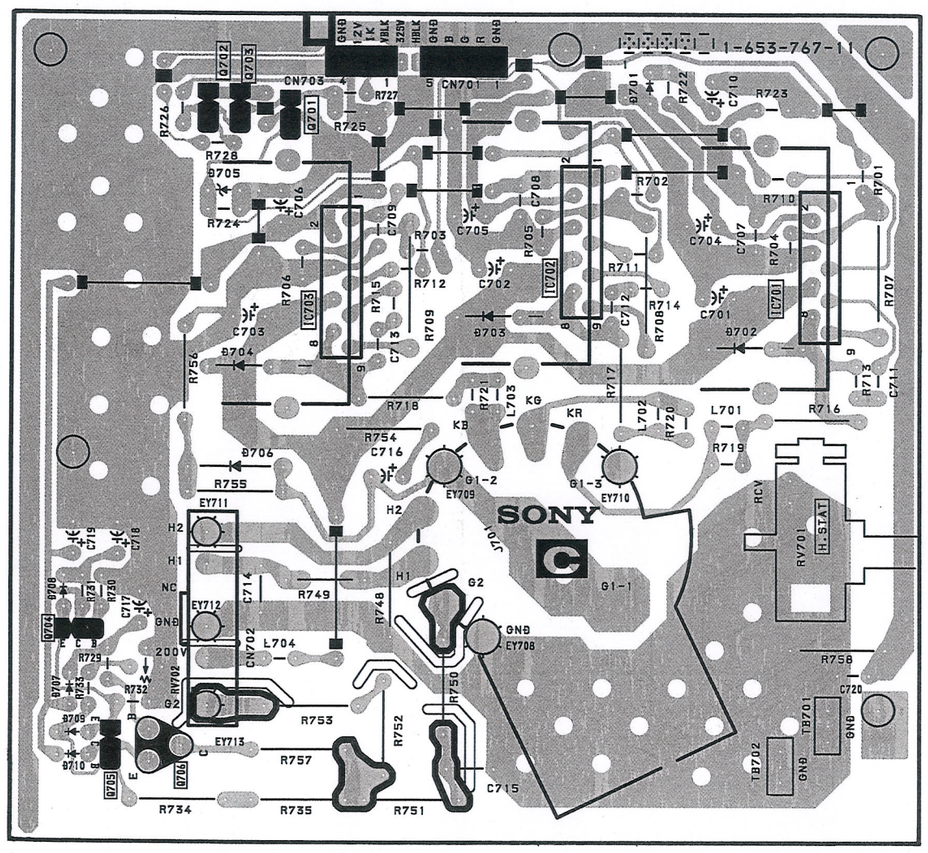

– UJ BOARD –

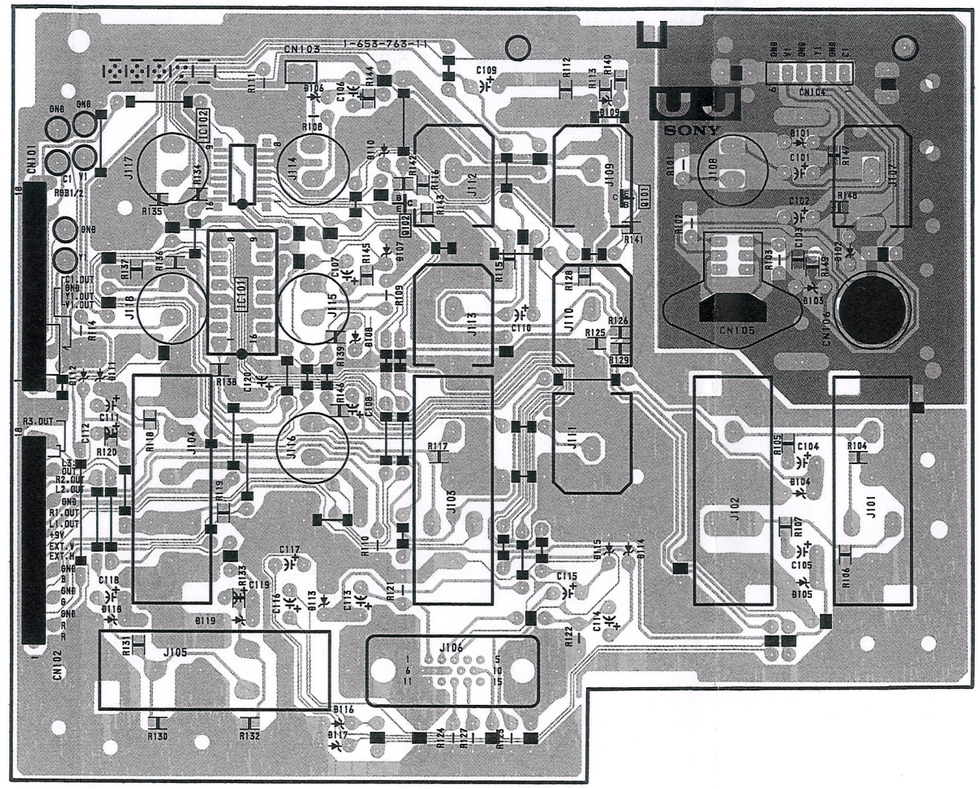

Note :

- : Pattern from the side which enables seeing.
- : Pattern of the rear side.

4-5. IC BL

B BOARD

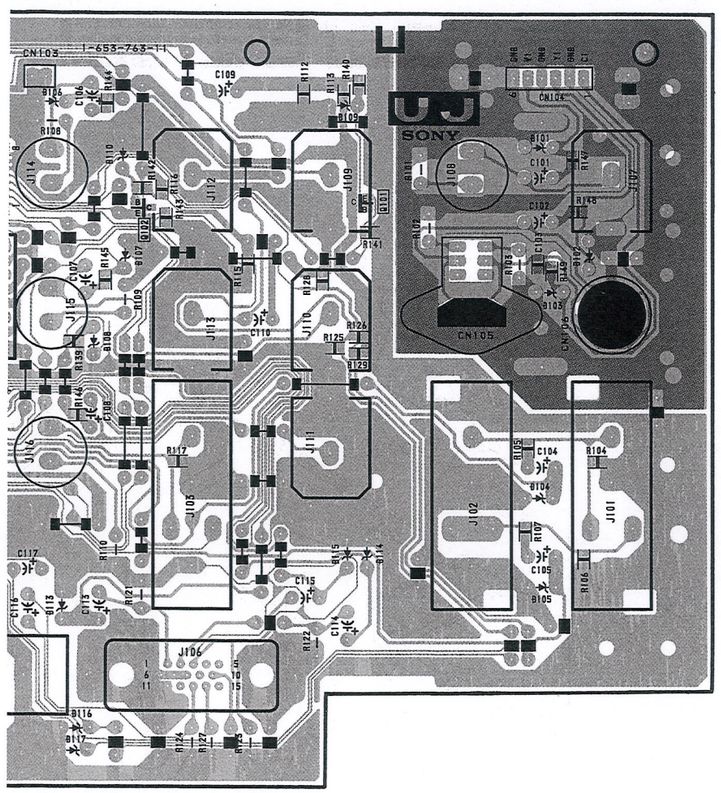

Note :

- : Pattern from the side which enables seeing.
- : Pattern of the rear side.

4-5. IC BLOCK DIAGRAMS

B BOARD IC308 M520365SP

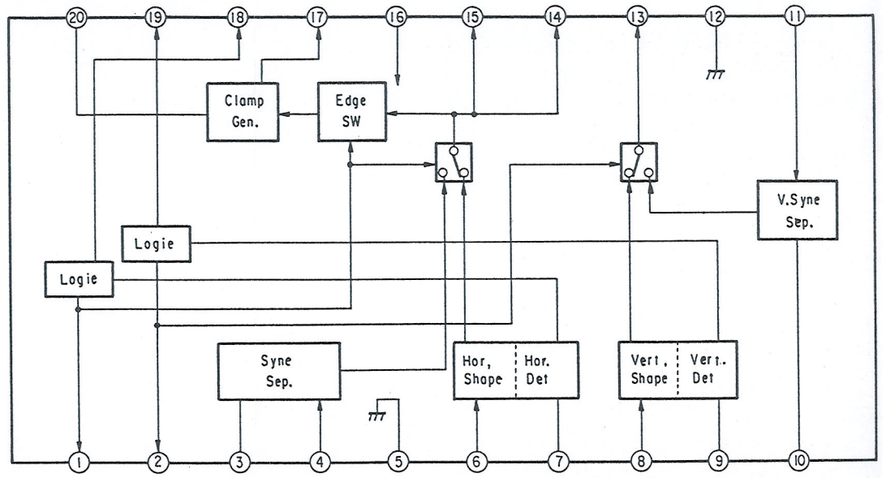

B BOARD IC311, 316 CXA1315M

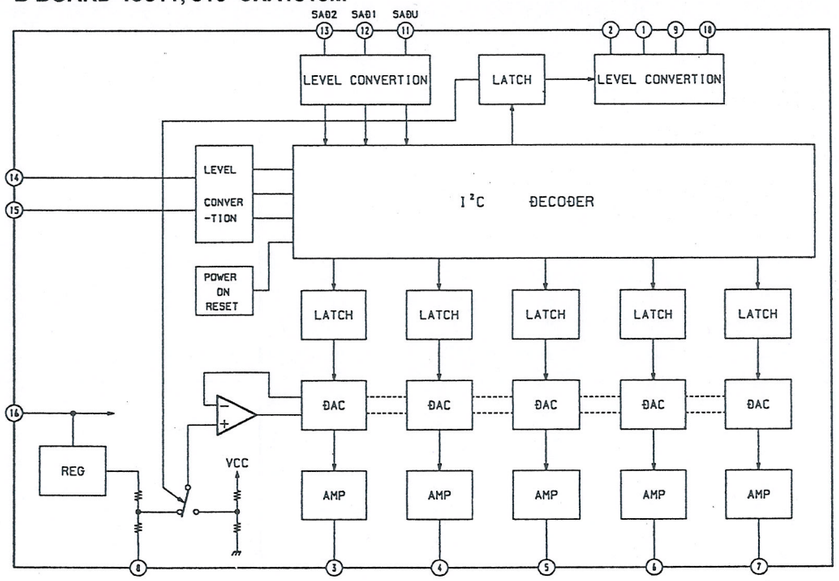

B BOARD IC312 CXA1739S

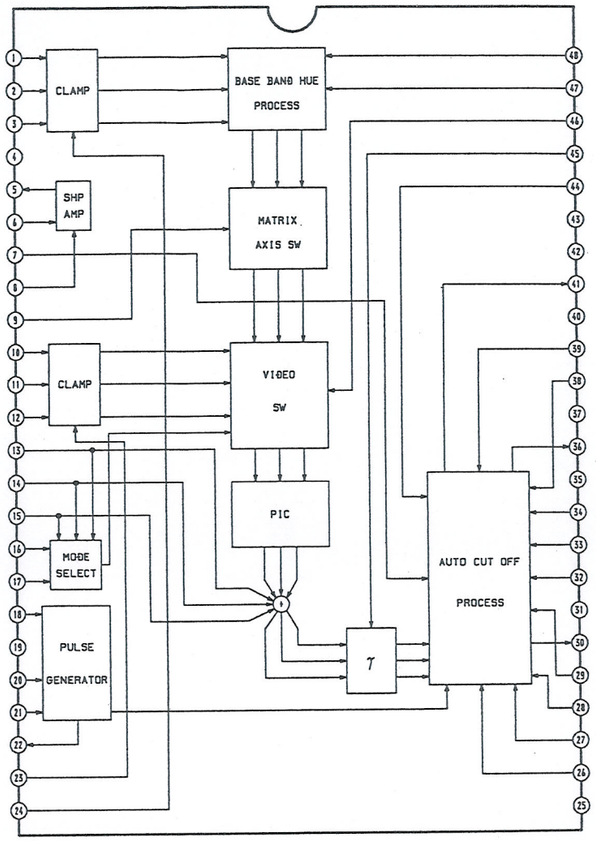

C BOARD IC701, 702, 703 TDA6111Q

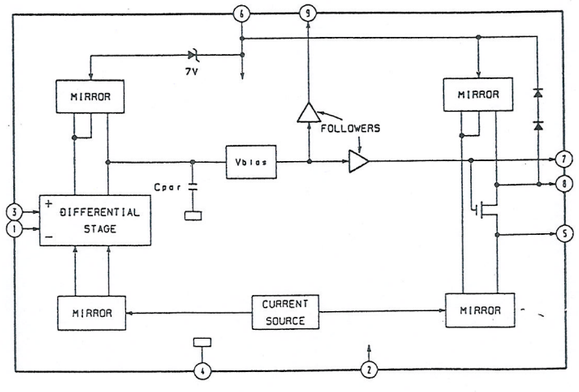

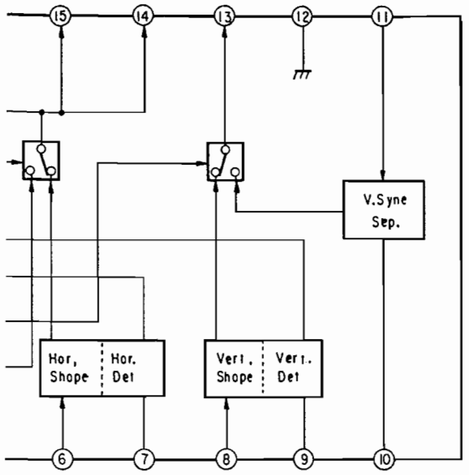

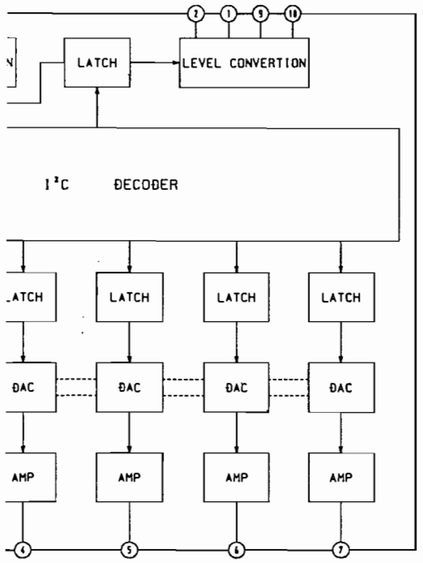

B BOARD IC312 CXA1739S

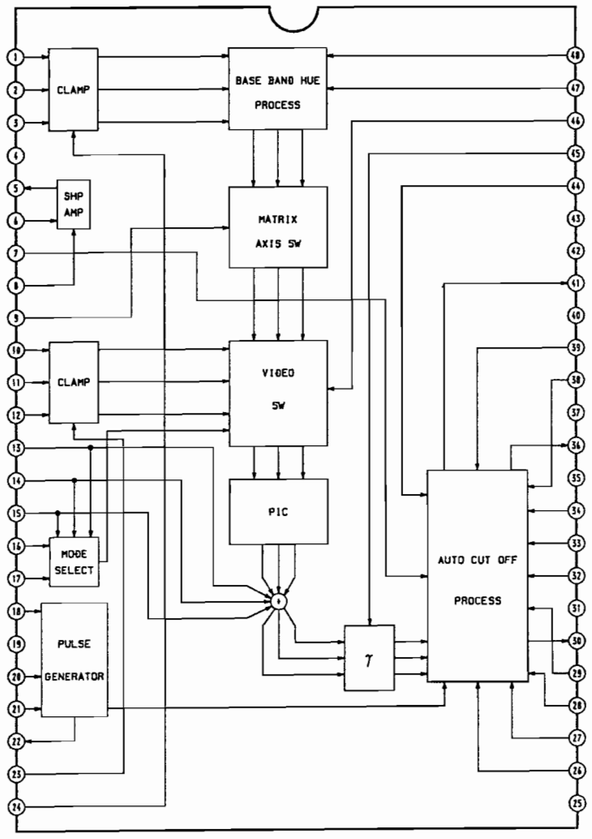

C BOARD IC701, 702, 703 TDA6111Q

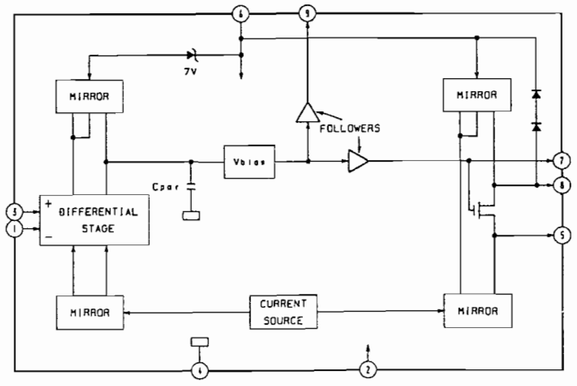

D BOARD IC1702 CXA-1526P

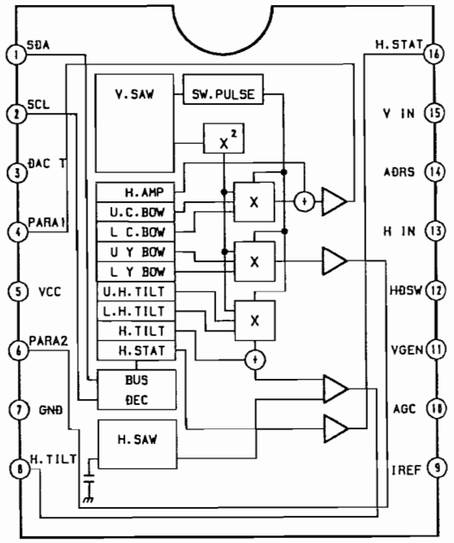

DS BOARD IC1601 LA7856

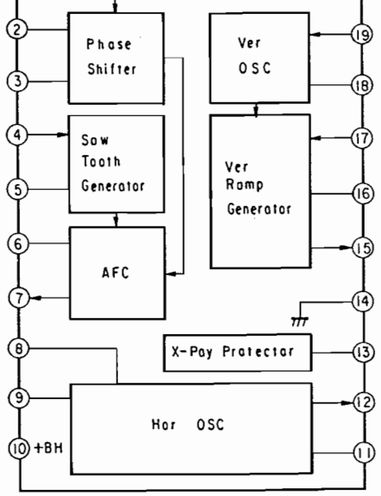

UT BOARD IC204 TA8184P

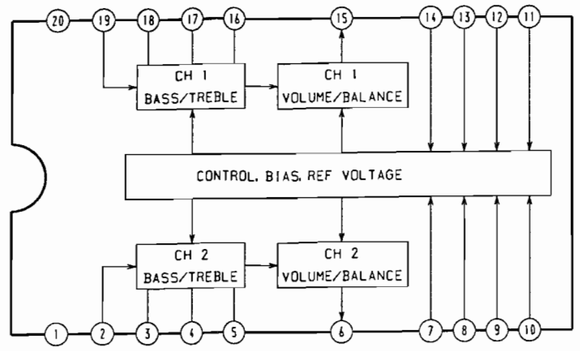

UT BOARD IC205 CXA1315M

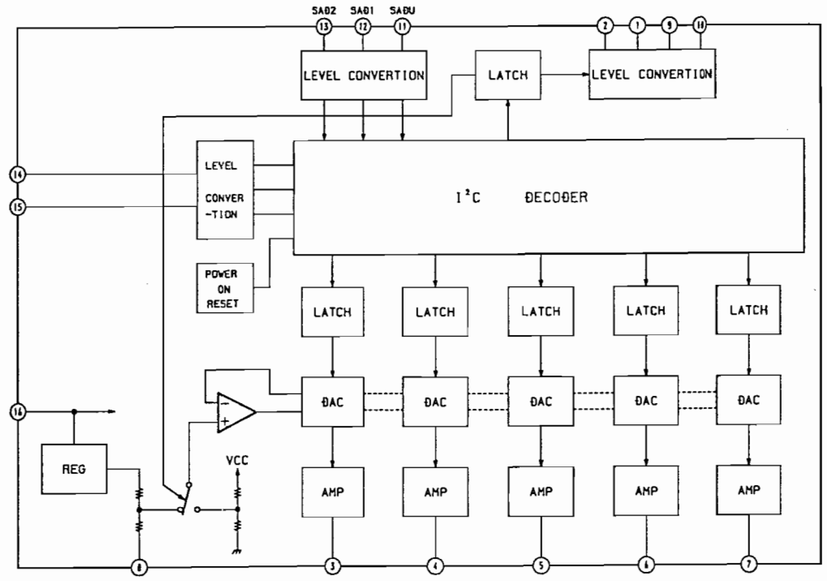

4-6. SEMICONDUCTORS

BA10358F
LM2903M
μPC4558G2
X25040SI

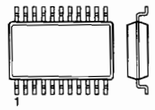

8pin SOP

CXA1315M
HD14053BFP
MC14040BF
MC74HC08AF-T2

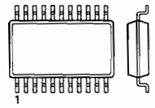

16pin SOP

CXA1470AM-T6

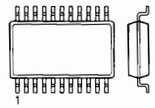

28pin SOP

CXA1526P
MAX232N
SN74LS221N

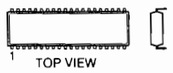

16pin DIP

CXA1726M-T6

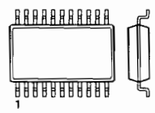

30pin SOP

CXA1739S

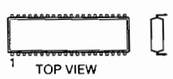

48pin DIP

DAC8840FS

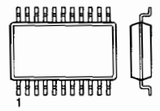

24pin SOP

HD6473257P10-PGM1

64pin DIP

LA7856A

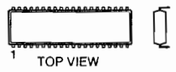

18pin DIP

LM7912CT

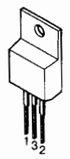

MC14001BF
MC74HC00AF
MC74HC04AF
MC74HC125AF
MC74HC32AF
MC74HC74AF
SN74HC02ANS
TC74HC164AF(EL)

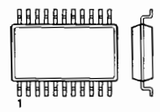

14pin SOP

MC68HC05P7BSC402191B

MM1170BFB
μPC358C
μPC393C

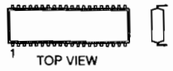

8pin DIP

M52036SP
TA8184P

20pin DIP

M62353FP

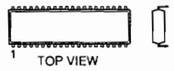

28pin DIP

NJM78M05FA
NJM78M09FA
NJM7805FA
TA7805S
TA7812S

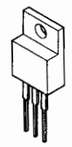

NJM79M05FA
NJM7912FA

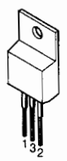

PM-28

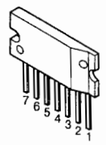

SE115N

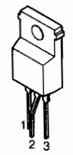

STR-M6515A
STR-M6524
STV9379

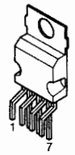

STR-S3115

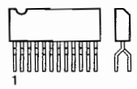

9pin ZIP

TA78L09S

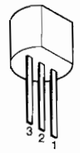

TA8200AH

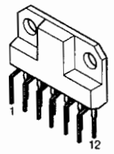

TDA6111Q

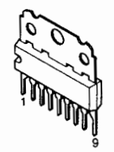

μPD6453GT-625-E1

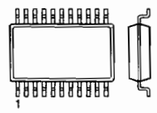

20pin SOP

DTA114EK
DTA144EK
DTC124XK
DTC144EK
2SA1036K-R
2SA1162-G
2SC1623-L5L6

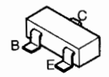

DTC144ES

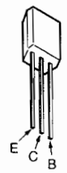

FS10SM-16

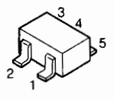

(1) DTr1 OUT
DTr2 IN
(2) DTr2 OUT
(3) DTr2 GND
(4) DTr1 IN
(5) DTr1 GND

IRF840
2SK552

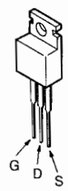

2SA1175-HFE
2SC2785-HFE

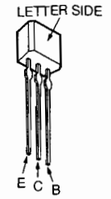

2SA1221-K
2SB733-34
2SB734-34
2SD774-34

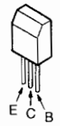

2SB1565EF

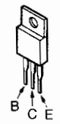

2SC2688-LK

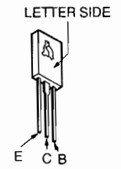

2SC3997CA

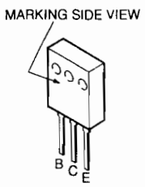

2SC4632LS-CB7

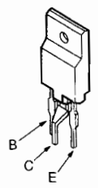

2SD2394-EF

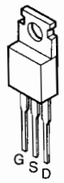

2SK1916-53-F50

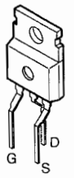

D1N20R
ERA38-06
ERA83-006
ERA85-009
RD10ESB2
RD13ESB2
RD2.2ESB2
RD24ESB3
RD30ESB2
RD33ESB2
RD39ESB4
RD5.6ESB1
RD5.6ESB2
RD6.2ESB1
RD6.2ESB2
RD7.5ESB2
RD9.1ESB2
RD9.1ESL
1SS119-25

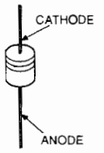

D4SB60L
D6SB60L

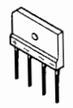

D5L60
FML-G12S

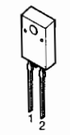

EGP10D
ERC81-004
ERC91-02
ERD31-04
RG4C

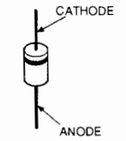

EGP20G
EL1Z
ERC06-15S
GP08D
RGP02-17EL-6433
RGP02-20EL-6394
1SS83

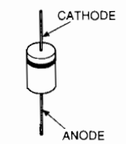

EDR08M-15

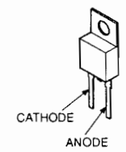

MA110

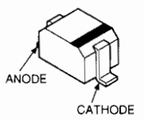

PC111YS

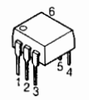

RU-3AM

SB01-15CI

S1VB40

1S2836

V

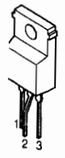

6515A
6524
79

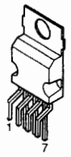

:3115

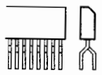

P

-09S

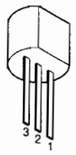

00AH

111Q

μPD6453GT-625-E1

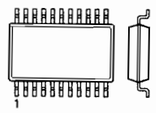

20pin SOP

DTA114EK
DTA144EK
DTC124XK
DTC144EK
2SA1036K-R
2SA1162-G
2SC1623-L5L6

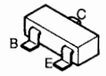

DTC144ES

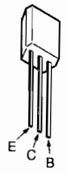

FS10SM-16

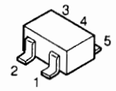

(1) DTr1 OUT
DTr2 IN
(2) DTr2 OUT
(3) DTr2 GND
(4) DTr1 IN
(5) DTr1 GND

IRF840
2SK552

2SA1175-HFE
2SC2785-HFE

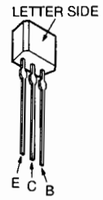

2SA1221-K
2SB733-34
2SB734-34
2SD774-34

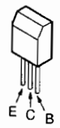

2SB1565EF

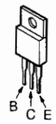

2SC2688-LK

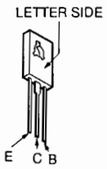

2SC3997CA

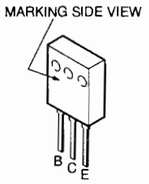

2SC4632LS-CB7

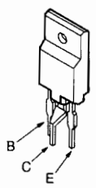

2SD2394-EF

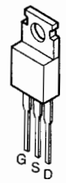

2SK1916-53-F50

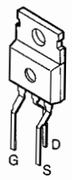

D1N20R
ERA38-06
ERA83-006
ERA85-009
RD10ESB2
RD13ESB2
RD2.2ESB2
RD24ESB3
RD30ESB2
RD33ESB2
RD39ESB4
RD5.6ESB1
RD5.6ESB2
RD6.2ESB1
RD6.2ESB2
RD7.5ESB2
RD9.1ESB2
RD9.1ESL
1SS119-25

D4SB60L
D6SB60L

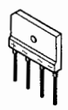

D5L60
FML-G12S

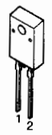

EGP10D
ERC81-004
ERC91-02
ERD31-04
RG4C

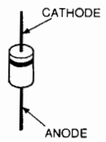

EGP20G
EL1Z
ERC06-15S
GP08D
RGP02-17EL-6433
RGP02-20EL-6394
1SS83

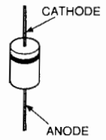

EDR08M-15

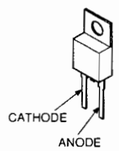

MA110

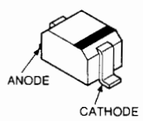

PC111YS

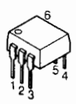

RU-3AM

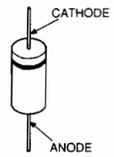

SB01-15CP

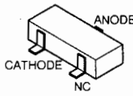

S1VB40

1S2836

SECTION 5
EXPLODED VIEWS

NOTE :
- Items with on part number and on description are not stocked because they are seldom required for routine service.
- The construction parts of an assembled part are indicated with a collation number in the remark column.
- Items marked "*" are not stocked since they are seldom required for routine service. Some delay should be anticipated when ordering these items.

The components identified by shading and mark ⚠ are critical for safety.
Replace only with part number specified.

Les composants identifies par une trame et une marque ⚠ sont critiques pour la securite.
Ne les remplacer que par une piece portant le numero specifie.

5-1. REAR COVER

▲ : BVTP 4×12 7-685-661-79
■ : BVTP 4×16 7-685-663-79

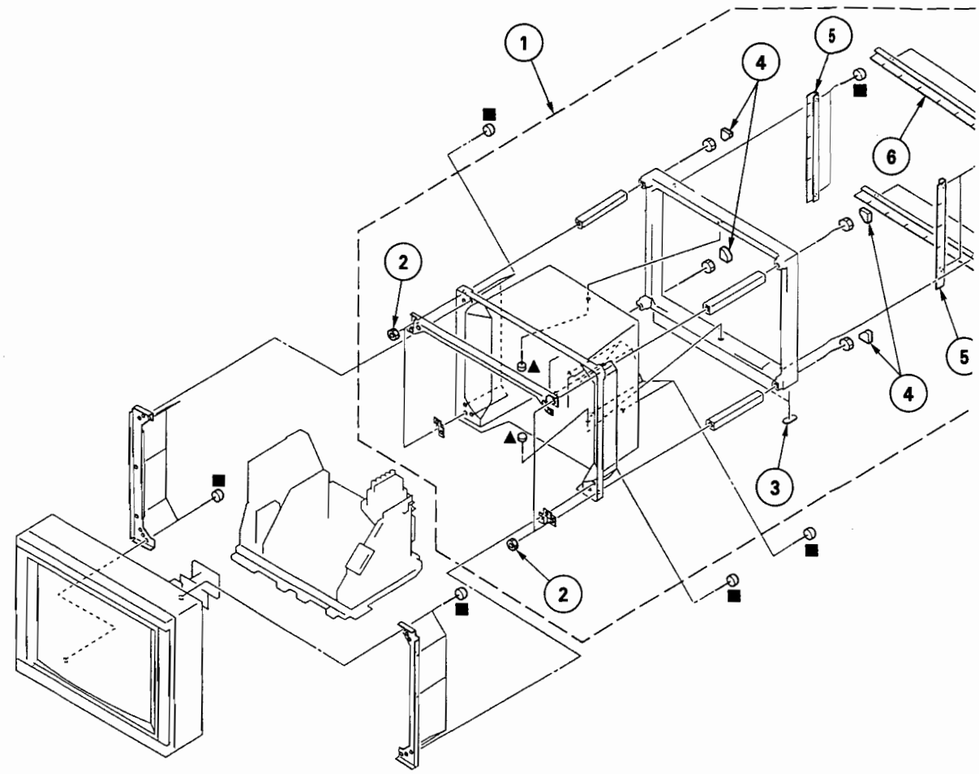

REF.NO.	PART NO.	DESCRIPTION	REMARK
1	X-4032-023-1	COVER ASSY, REAR	2~6
2	4-304-511-00	NUT (M5), FLANGE	
3	4-392-860-01	CUSHION (B)	
4	4-039-913-01	CAP	
5	4-039-918-01	BRACKET (V), REAR FRAME	
6	4-039-917-01	BRACKET (H), REAR FRAME	

SECTION 5
EXPLODED VIEWS

NOTE :
- Items with on part number and on description are not stocked because they are seldom required for routine service.
- The construction parts of an assembled part are indicated with a collation number in the remark column.
- Items marked "*" are not stocked since they are seldom required for routine service. Some delay should be anticipated when ordering these items.

The components identified by shading and mark ⚠ are critical for safety.
Replace only with part number specified.

Les composants identifies par une trame et une marque ⚠ sont critiques pour la securite.
Ne les remplacer que par une piece portant le numero specifie.

5-1. REAR COVER

▲ : BVTP 4×12 7-685-661-79
■ : BVTP 4×16 7-685-663-79

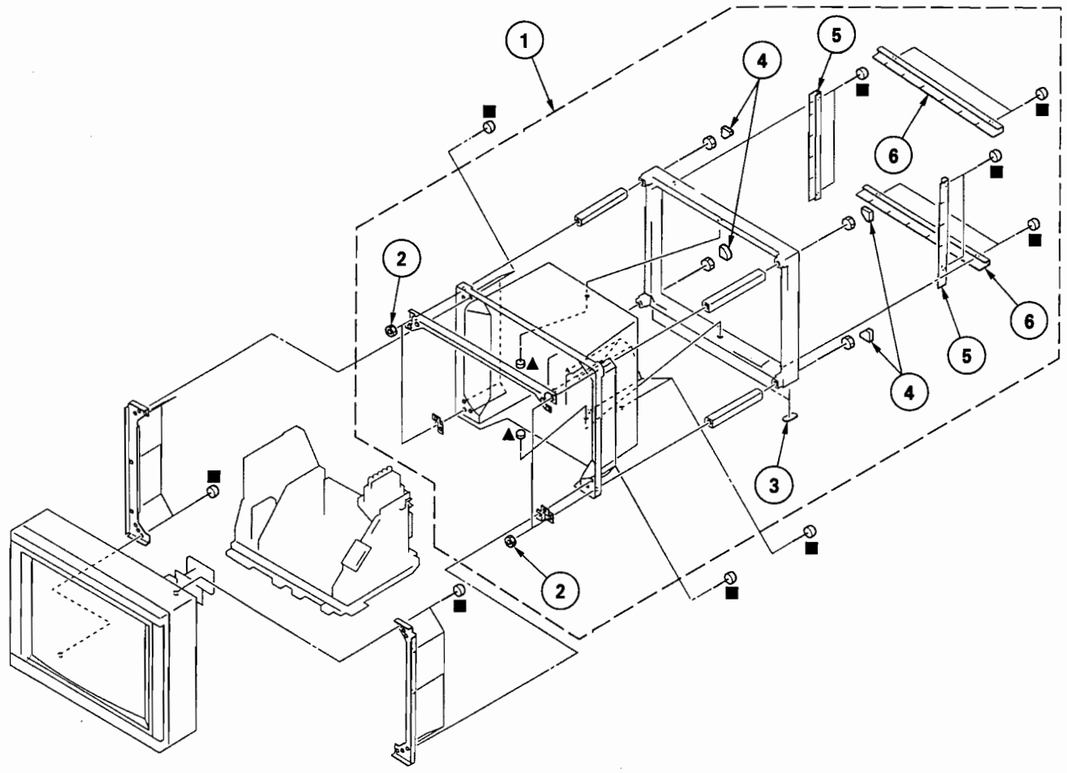

REF.NO.	PART NO.	DESCRIPTION	REMARK
1	X-4032-023-1	COVER ASSY, REAR	2~6
2	4-304-511-00	NUT (M5), FLANGE	
3	4-392-860-01	CUSHION (B)	
4	4-039-913-01	CAP	
5	4-039-918-01	BRACKET (V), REAR FRAME	
6	4-039-917-01	BRACKET (H), REAR FRAME	

5-2. PICTURE TUBE

● : BVTP 3×12 7-685-648-79
□ : BV 3×25 7-685-152-19

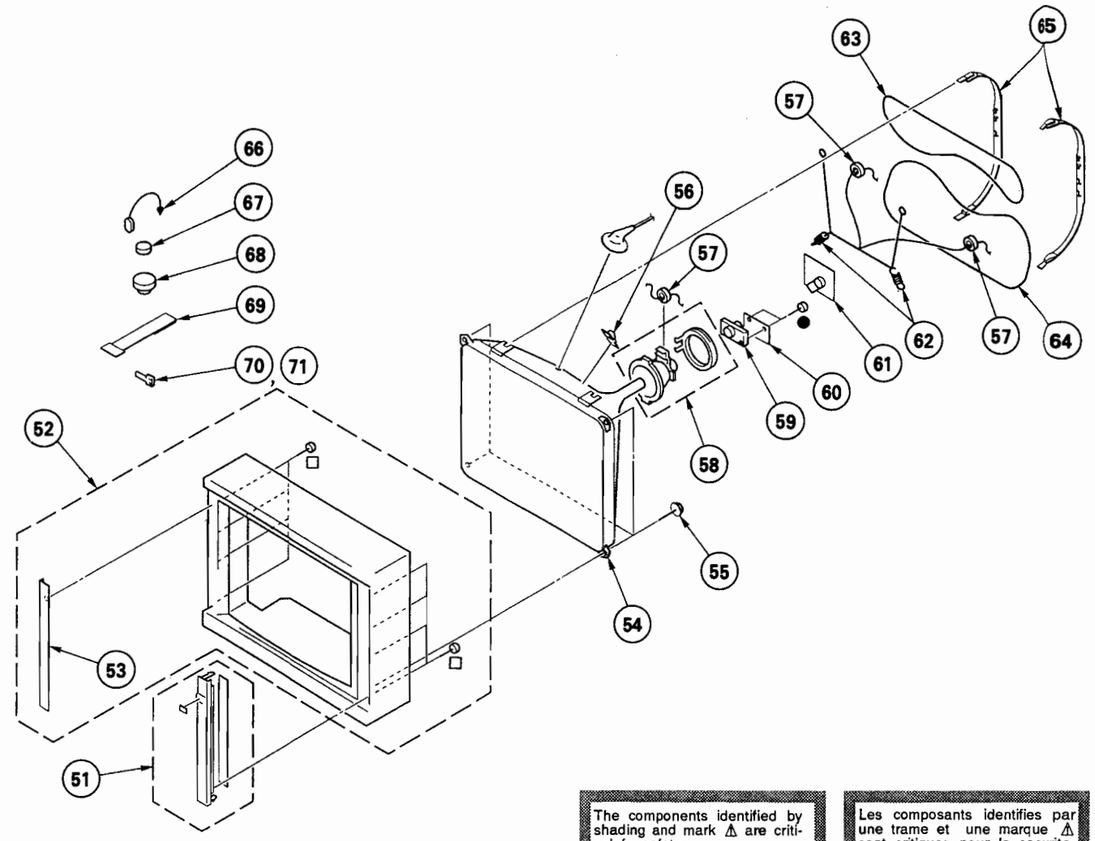

The components identified by shading and mark ⚠ are critical for safety.
Replace only with part number specified.

Les composants identifies par une trame et une marque ⚠ sont critiques pour la securite.
Ne les remplacer que par une piece portant le numero specifie.

REF.NO.	PART NO.	DESCRIPTION	REMARK
51	1-473-102-11	KEY BOARD UNIT	
52	X-4032-024-1	BEZNET ASSY	
53	4-045-431-01	PANEL, BLIND	
54	⚠8-733-842-05	PICTURE TUBE (M68KUZ10X)	
55	4-046-765-01	SCREW, TAPPING	
56	3-704-495-01	SPACER, DY	
57	1-543-982-11	CORE, FERRITE	
59	⚠1-452-616-13	NECK ASSY, PICTURE TUBE (NA323)	
60	*A-1342-267-A	V BOARD, COMPLETE	
61	*A-1331-380-A	C BOARD, COMPLETE	
62	4-369-318-00	SPRING, TENSION	
63	⚠1-426-573-22	COIL, DEGAUSSING (PGM-2950)	
	⚠1-402-715-21	COIL, DEMAGNETIZATION (PGM-2950E)	
64	⚠1-426-574-22	COIL, DEGAUSSING (PGM-2950)	
	⚠1-402-716-21	COIL, DEMAGNETIZATION (PGM-2950E)	
65	4-037-983-01	HOLDER, DGC	
66	4-308-870-00	CLIP, LEAD WIRE	
67	1-452-032-00	MAGNET,DISK	
68	1-452-094-00	MAGNET, ROTATABLE DISK; 15MMφ	
69	X-4306-312-0	PERMALLOY ASSY, CONVERGENCE	
70	4-034-272-01	PLATE, CORRECTION, TLV	
71	4-034-272-11	PLATE, CORRECTION, TLV	

5-3. CHASSIS

●: BVTP 3×12 7-685-648-79
■: BVTP 4×16 7-685-663-79
△: BVTT 4×8 7-682-561-04

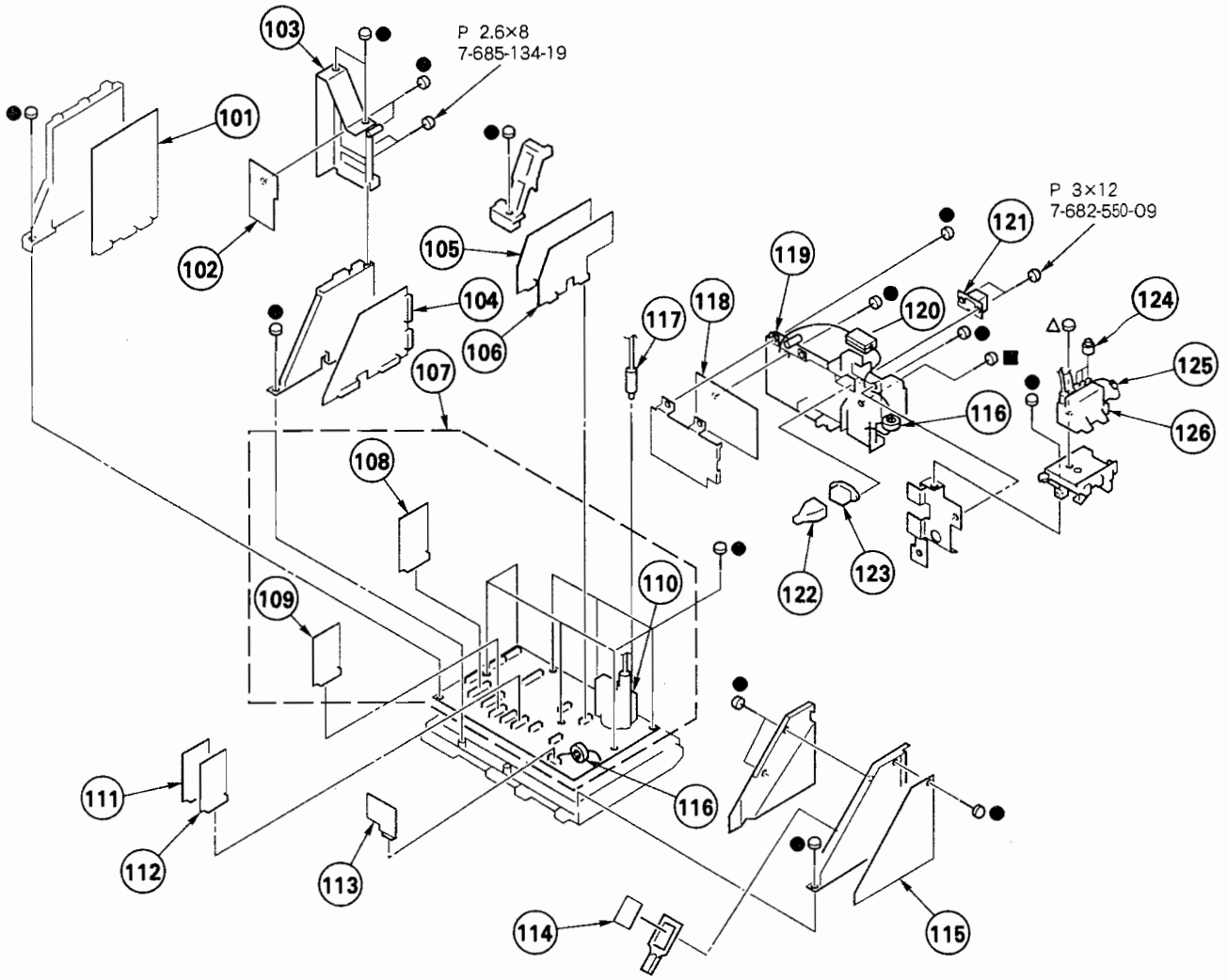

The components identified by shading and mark ⚠ are critical for safety.
Replace only with part number specified.

Les composants identifies par une trame et une marque ⚠ sont critiques pour la securite.
Ne les remplacer que par une piece portant le numero specifie.

REF.NO.	PART NO.	DESCRIPTION	REMARK
101	*A-1131-144-A	B BOARD, COMPLETE	
102	*A-1373-488-A	UA BOARD, COMPLETE	
103	4-045-439-01	BRACKET, UA	
104	*A-1373-513-A	UT BOARD, COMPLETE	
105	*A-1346-254-A	D BOARD, COMPLETE	
106	*A-1347-096-A	VC BOARD, COMPLETE (PGM-2950)	
	*A-1347-102-A	VC BOARD, COMPLETE (PGM-2950E)	
107	*A-1297-429-A	A BOARD, COMPLETE	108,109
108	*A-1304-027-A	M BOARD, COMPLETE	
109	*A-1341-889-A	DX BOARD, COMPLETE	
110	⚠ 1-453-150-11	TRANSFORMER ASSY, FLYBACK(NX-3041//J1T)	
111	*A-1346-301-A	DS BOARD, COMPLETE	
112	*A-1346-277-A	DA BOARD, COMPLETE	
113	*A-1372-054-A	H3 BOARD, COMPLETE	
114	A-1311-427-A	G1 BOARD, COMPLETE (PGM-2950E)	
	A-1311-428-A	G1 BOARD, COMPLETE (PGM-2950)	
115	*A-1316-217-A	G BOARD, COMPLETE (PGM-2950E)	
	*A-1316-196-A	G BOARD, COMPLETE (PGM-2950)	
116	1-543-982-11	CORE, FERRITE	
117	1-900-140-13	LEAD ASSY, FOCUS	
118	*A-1373-500-A	UJ BOARD, COMPLETE	
119	4-045-440-21	BRACKET, UJ	
120	1-543-653-11	CORE ASSY, BEAD(DIVISION TYPE)	
121	2-990-241-02	HOLDER (A), PLUG	
122	4-601-466-11	COVER, 3P INLET	
123	⚠ 1-580-375-11	INLET 3P	
124	4-373-137-01	CAP (Z), RUBBER	
125	1-202-818-00	RES, SOLID 1.0K	
126	⚠ 1-453-108-11	DC BLOCK, HIGH-VOLTAGE	

B

SECTION 6
ELECTRICAL PARTS LIST

NOTE :

The components identified by shading and mark ⚠ are critical for safety.
Replace only with part number specified.

Les composants identifies par une trame et une marque ⚠ sont critiques pour la securite.
Ne les remplacer que par une piece portant le numero specifie.

- Items marked "*" are not stocked since they are seldom required for routine service. Some delay should be anticipated when ordering these items.
- All variable and adjustable resistors have characteristic curve B, unless otherwise noted.

RESISTORS
- All resistors are in ohms.
- F : nonflammable

When indicating parts by reference number, please include the board name.

CAPACITORS
- MF : μF, PF : μμF

COILS
- MMH : mH, UH : μH

- There are some cases the reference number on one board overlaps on the other board. Therefore, when ordering parts by the reference number, please include the board name.

REF.NO.	PART NO.	DESCRIPTION		REMARK
	*A-1131-144-A	B BOARD, COMPLETE **********		
		<CAPACITOR>		
C302	1-163-035-00	CERAMIC CHIP 0.047MF	50V	
C305	1-124-126-00	ELECT 47MF	20% 16V	
C306	1-163-035-00	CERAMIC CHIP 0.047MF	50V	
C314	1-124-126-00	ELECT 47MF	20% 16V	
C315	1-163-035-00	CERAMIC CHIP 0.047MF	50V	
C316	1-163-117-00	CERAMIC CHIP 100PF	5% 50V	
C317	1-163-035-00	CERAMIC CHIP 0.047MF	50V	
C318	1-124-126-00	ELECT 47MF	20% 16V	
C319	1-163-117-00	CERAMIC CHIP 100PF	5% 50V	
C320	1-130-483-00	MYLAR 0.01MF	5% 50V	
C321	1-124-903-11	ELECT 1MF	20% 50V	
C322	1-124-903-11	ELECT 1MF	20% 50V	
C323	1-130-483-00	MYLAR 0.01MF	5% 50V	
C324	1-124-903-11	ELECT 1MF	20% 50V	
C325	1-124-903-11	ELECT 1MF	20% 50V	
C326	1-137-368-11	FILM 0.0047MF	5% 50V	
C334	1-124-126-00	ELECT 47MF	20% 16V	
C338	1-124-126-00	ELECT 47MF	20% 16V	
C339	1-124-126-00	ELECT 47MF	20% 16V	
C413	1-124-903-11	ELECT 1MF	20% 50V	
C415	1-163-809-11	CERAMIC CHIP 0.047MF	10% 25V	
C416	1-163-809-11	CERAMIC CHIP 0.047MF	10% 25V	
C417	1-163-809-11	CERAMIC CHIP 0.047MF	10% 25V	
C418	1-163-009-11	CERAMIC CHIP 0.001MF	10% 50V	
C419	1-136-153-00	FILM 0.01MF	5% 50V	
C420	1-136-169-00	FILM 0.22MF	5% 50V	
C421	1-124-903-11	ELECT 1MF	20% 50V	
C422	1-136-165-00	FILM 0.1MF	5% 50V	
C423	1-124-903-11	ELECT 1MF	20% 50V	
C424	1-136-165-00	FILM 0.1MF	5% 50V	
C425	1-124-903-11	ELECT 1MF	20% 50V	
C426	1-136-165-00	FILM 0.1MF	5% 50V	
C427	1-124-903-11	ELECT 1MF	20% 50V	
C428	1-163-035-00	CERAMIC CHIP 0.047MF	50V	
C429	1-126-935-11	ELECT 470MF	20% 16V	
C430	1-124-903-11	ELECT 1MF	20% 50V	
C431	1-126-964-11	ELECT 10MF	20% 50V	
C434	1-124-767-00	ELECT 2.2MF	20% 50V	
C435	1-137-399-11	FILM 0.1MF	5% 50V	
C436	1-124-903-11	ELECT 1MF	20% 50V	
C437	1-126-933-11	ELECT 100MF	20% 16V	
C438	1-163-035-00	CERAMIC CHIP 0.047MF	50V	
C450	1-163-031-11	CERAMIC CHIP 0.01MF	50V	
C451	1-163-031-11	CERAMIC CHIP 0.01MF	50V	
C452	1-163-031-11	CERAMIC CHIP 0.01MF	50V	
C453	1-163-031-11	CERAMIC CHIP 0.01MF	50V	
C455	1-124-126-00	ELECT 47MF	20% 16V	
C458	1-163-031-11	CERAMIC CHIP 0.01MF	50V	
C459	1-163-117-00	CERAMIC CHIP 100PF	5% 50V	
C1420	1-163-121-00	CERAMIC CHIP 150PF	5% 50V	
C1423	1-163-035-00	CERAMIC CHIP 0.047MF	50V	
C1424	1-124-126-00	ELECT 47MF	20% 16V	
		<CONNECTOR>		
CN302	1-573-300-11	CONNECTOR, BOARD TO BOARD 18P		
CN303	1-573-300-11	CONNECTOR, BOARD TO BOARD 18P		
CN304	1-573-300-11	CONNECTOR, BOARD TO BOARD 18P		
CN305	*1-564-508-11	PLUG, CONNECTOR 5P		
CN306	*1-564-507-11	PLUG, CONNECTOR 4P		
		<DIODE>		
D315	8-719-911-19	DIODE 1SS119-25		
D316	8-719-911-19	DIODE 1SS119-25		
D317	8-719-911-19	DIODE 1SS119-25		
D318	8-719-911-19	DIODE 1SS119-25		
D319	8-719-911-19	DIODE 1SS119-25		
D320	8-719-911-19	DIODE 1SS119-25		
D321	8-719-911-19	DIODE 1SS119-25		
D322	8-719-911-19	DIODE 1SS119-25		
D323	8-719-911-19	DIODE 1SS119-25		
D324	8-719-911-19	DIODE 1SS119-25		
D325	8-719-911-19	DIODE 1SS119-25		
D326	8-719-911-19	DIODE 1SS119-25		
D327	8-719-911-19	DIODE 1SS119-25		
D328	8-719-911-19	DIODE 1SS119-25		
D329	8-719-911-19	DIODE 1SS119-25		
D1403	8-719-911-19	DIODE 1SS119-25		
		<IC>		
IC307	8-759-032-11	IC MC74HC04AF		
IC308	8-759-637-31	IC M52036SP		
IC311	8-752-058-68	IC CXA1315M		
IC312	8-752-067-05	IC CXA1739S		
IC316	8-752-058-68	IC CXA1315M		
IC319	8-759-300-71	IC HD14053BFP		
IC320	8-759-300-71	IC HD14053BFP		
IC1402	8-759-925-72	IC SN74HC02ANS		
		<CONDCTOR CHIP>		
JR305	1-216-295-91	CONDCTOR, CHIP		
JR306	1-216-295-91	CONDCTOR, CHIP		
JR307	1-216-295-91	CONDCTOR, CHIP		
JR308	1-216-295-91	CONDCTOR, CHIP		
JR315	1-216-295-91	CONDCTOR, CHIP		

B A

REF.NO.	PART NO.	DESCRIPTION				REMARK
JR316	1-216-295-91	CONDCTOR, CHIP				
		<COIL>				
L1403	1-408-409-00	INDUCTOR	10UH			
L1404	1-410-470-11	INDUCTOR	10UH			
		<TRANSISTOR>				
Q333	8-729-216-22	TRANSISTOR 2SA1162-G				
Q334	8-729-120-28	TRANSISTOR 2SC1623-L5L6				
Q335	8-729-216-22	TRANSISTOR 2SA1162-G				
Q336	8-729-120-28	TRANSISTOR 2SC1623-L5L6				
Q337	8-729-120-28	TRANSISTOR 2SC1623-L5L6				
Q338	8-729-216-22	TRANSISTOR 2SA1162-G				
Q339	8-729-216-22	TRANSISTOR 2SA1162-G				
Q340	8-729-216-22	TRANSISTOR 2SA1162-G				
Q341	8-729-216-22	TRANSISTOR 2SA1162-G				
Q342	8-729-216-22	TRANSISTOR 2SA1162-G				
Q343	8-729-216-22	TRANSISTOR 2SA1162-G				
Q346	8-729-120-28	TRANSISTOR 2SC1623-L5L6				
Q355	8-729-901-01	TRANSISTOR DTC144EK				
Q1415	8-729-901-01	TRANSISTOR DTC144EK				
		<RESISTOR>				
R309	1-216-043-91	METAL GLAZE	560	5%	1/10W	
R310	1-216-105-91	METAL GLAZE	220K	5%	1/10W	
R311	1-216-081-00	METAL GLAZE	22K	5%	1/10W	
R339	1-216-071-00	METAL GLAZE	8.2K	5%	1/10W	
R340	1-216-061-00	METAL GLAZE	3.3K	5%	1/10W	
R347	1-216-073-00	METAL GLAZE	10K	5%	1/10W	
R356	1-216-033-00	METAL GLAZE	220	5%	1/10W	
R357	1-216-033-00	METAL GLAZE	220	5%	1/10W	
R358	1-216-073-00	METAL GLAZE	10K	5%	1/10W	
R359	1-216-065-00	METAL GLAZE	4.7K	5%	1/10W	
R360	1-216-057-00	METAL GLAZE	2.2K	5%	1/10W	
R361	1-216-699-11	METAL CHIP	100K	0.50%	1/10W	
R362	1-216-049-00	METAL GLAZE	1K	5%	1/10W	
R363	1-216-695-11	METAL CHIP	68K	0.50%	1/10W	
R364	1-216-059-00	METAL GLAZE	2.7K	5%	1/10W	
R365	1-216-675-11	METAL CHIP	10K	0.50%	1/10W	
R366	1-216-017-00	METAL GLAZE	47	5%	1/10W	
R367	1-216-065-00	METAL GLAZE	4.7K	5%	1/10W	
R368	1-216-041-00	METAL GLAZE	470	5%	1/10W	
R369	1-216-041-00	METAL GLAZE	470	5%	1/10W	
R370	1-216-049-00	METAL GLAZE	1K	5%	1/10W	
R371	1-216-057-00	METAL GLAZE	2.2K	5%	1/10W	
R442	1-216-049-00	METAL GLAZE	1K	5%	1/10W	
R443	1-216-049-00	METAL GLAZE	1K	5%	1/10W	
R452	1-216-073-00	METAL GLAZE	10K	5%	1/10W	
R464	1-216-061-00	METAL GLAZE	3.3K	5%	1/10W	
R465	1-216-079-00	METAL GLAZE	18K	5%	1/10W	
R467	1-216-025-00	METAL GLAZE	100	5%	1/10W	
R468	1-216-077-00	METAL GLAZE	15K	5%	1/10W	
R470	1-216-057-00	METAL GLAZE	2.2K	5%	1/10W	
R471	1-216-025-00	METAL GLAZE	100	5%	1/10W	
R472	1-216-063-00	METAL GLAZE	3.9K	5%	1/10W	
R473	1-216-025-00	METAL GLAZE	100	5%	1/10W	
R474	1-216-077-00	METAL GLAZE	15K	5%	1/10W	
R476	1-216-061-00	METAL GLAZE	3.3K	5%	1/10W	
R477	1-216-025-00	METAL GLAZE	100	5%	1/10W	
R478	1-216-077-00	METAL GLAZE	15K	5%	1/10W	
R480	1-216-061-00	METAL GLAZE	3.3K	5%	1/10W	
R481	1-216-057-00	METAL GLAZE	2.2K	5%	1/10W	
R482	1-216-025-00	METAL GLAZE	100	5%	1/10W	
R483	1-216-063-00	METAL GLAZE	3.9K	5%	1/10W	
R484	1-216-025-00	METAL GLAZE	100	5%	1/10W	
R485	1-216-025-00	METAL GLAZE	100	5%	1/10W	
R486	1-216-057-00	METAL GLAZE	2.2K	5%	1/10W	
R487	1-216-069-00	METAL GLAZE	6.8K	5%	1/10W	
R489	1-216-025-00	METAL GLAZE	100	5%	1/10W	
R490	1-216-063-00	METAL GLAZE	3.9K	5%	1/10W	
R491	1-216-025-00	METAL GLAZE	100	5%	1/10W	
R492	1-216-073-00	METAL GLAZE	10K	5%	1/10W	
R493	1-216-069-00	METAL GLAZE	6.8K	5%	1/10W	
R494	1-216-073-00	METAL GLAZE	10K	5%	1/10W	
R495	1-216-073-00	METAL GLAZE	10K	5%	1/10W	
R496	1-216-049-00	METAL GLAZE	1K	5%	1/10W	
R497	1-216-057-00	METAL GLAZE	2.2K	5%	1/10W	
R1300	1-216-073-00	METAL GLAZE	10K	5%	1/10W	
R1301	1-216-061-00	METAL GLAZE	3.3K	5%	1/10W	
R1303	1-216-065-00	METAL GLAZE	4.7K	5%	1/10W	
R1305	1-216-039-00	METAL GLAZE	390	5%	1/10W	
R1306	1-216-097-00	METAL GLAZE	100K	5%	1/10W	
R1307	1-216-025-00	METAL GLAZE	100	5%	1/10W	
R1308	1-216-057-00	METAL GLAZE	2.2K	5%	1/10W	
R1309	1-216-073-00	METAL GLAZE	10K	5%	1/10W	
R1310	1-216-073-00	METAL GLAZE	10K	5%	1/10W	
R1313	1-216-073-00	METAL GLAZE	10K	5%	1/10W	
R1314	1-216-075-00	METAL GLAZE	12K	5%	1/10W	
R1315	1-216-033-00	METAL GLAZE	220	5%	1/10W	
R1316	1-216-033-00	METAL GLAZE	220	5%	1/10W	
R1327	1-216-073-00	METAL GLAZE	10K	5%	1/10W	
R1328	1-216-073-00	METAL GLAZE	10K	5%	1/10W	
R1329	1-216-073-00	METAL GLAZE	10K	5%	1/10W	
R1333	1-216-073-00	METAL GLAZE	10K	5%	1/10W	
R1334	1-216-057-00	METAL GLAZE	2.2K	5%	1/10W	
R1335	1-216-049-00	METAL GLAZE	1K	5%	1/10W	
R1336	1-216-057-00	METAL GLAZE	2.2K	5%	1/10W	
R1337	1-216-085-00	METAL GLAZE	33K	5%	1/10W	
R1338	1-216-057-00	METAL GLAZE	2.2K	5%	1/10W	
R1339	1-216-689-11	METAL GLAZE	39K	5%	1/10W	
R1340	1-216-097-00	METAL GLAZE	100K	5%	1/10W	
R1341	1-216-061-00	METAL GLAZE	3.3K	5%	1/10W	
R1342	1-216-073-00	METAL GLAZE	10K	5%	1/10W	
R1349	1-216-097-00	METAL GLAZE	100K	5%	1/10W	
R1350	1-216-097-00	METAL GLAZE	100K	5%	1/10W	
R1351	1-216-097-00	METAL GLAZE	100K	5%	1/10W	
R1353	1-216-081-00	METAL GLAZE	22K	5%	1/10W	
R1354	1-216-037-00	METAL GLAZE	330	5%	1/10W	
R1355	1-216-081-00	METAL GLAZE	22K	5%	1/10W	
R1356	1-216-079-00	METAL GLAZE	18K	5%	1/10W	
R1364	1-216-073-00	METAL GLAZE	10K	5%	1/10W	
R1431	1-216-075-00	METAL GLAZE	12K	5%	1/10W	
R1446	1-216-057-00	METAL GLAZE	2.2K	5%	1/10W	

****

*A-1297-429-A	A BOARD, COMPLETE	
	**********	
	(M, DX BOARD, INCLUDING)	
*4-043-154-01	HOLDER, IC	
*4-381-908-01	INSULATOR (B)	
4-382-854-01	SCREW (M3X8), P, SW (+)	
4-382-854-11	SCREW (M3X10), P, SW (+)	
4-389-026-11	SHEET, BN	

Les composants identifies par une trame et une marque ⚠ sont critiques pour la securite. Ne les remplacer que par une piece portant le numero specifie.

The components identified by shading and mark ⚠ are critical for safety. Replace only with part number specified.

A

REF.NO.	PART NO.	DESCRIPTION			REMARK
		<CAPACITOR>			
C503	1-104-492-11	FILM	0.0056MF	3%	2KV
C504	1-104-492-11	FILM	0.0056MF	3%	2KV
C505	1-104-489-11	FILM	820PF	3%	1.6KV
C517	1-106-391-12	MYLAR	0.1MF	10%	200V
C518	1-104-797-11	ELECT	0.47MF	20%	100V
C519	1-102-110-00	CERAMIC	220PF	10%	50V
C520	1-102-002-00	CERAMIC	680PF	10%	500V
C524	⚠1-162-116-00	CERAMIC	680PF	10%	2KV
C525	⚠1-129-720-00	FILM	0.033MF	10%	400V
C526	1-107-514-11	FILM	1.2MF	5%	400V
C527	1-106-343-00	MYLAR	0.001MF	10%	100V
C528	1-136-108-00	FILM	0.43MF	5%	200V
C529	1-104-709-11	ELECT	4.7MF	0	160V
C530	1-107-514-11	FILM	1.2MF	5%	400V
C531	1-137-091-11	FILM	0.56MF	5%	200V
C532	1-107-961-91	ELECT	10MF	20%	250V
C537	1-106-355-12	MYLAR	0.0033MF	10%	200V
C538	1-137-417-11	FILM	0.015MF	10%	100V
C550	1-104-664-11	ELECT	47MF	20%	25V
C551	1-104-664-11	ELECT	47MF	20%	25V
C558	1-129-718-00	FILM	0.022MF	5%	630V
C559	1-106-387-00	MYLAR	0.068MF	10%	200V
C560	1-136-557-11	FILM	0.0033MF	10%	630V
C561	1-102-244-00	CERAMIC	220PF	10%	500V
C562	1-136-553-11	FILM	0.0015MF	10%	630V
C563	1-102-228-00	CERAMIC	470PF	10%	500V
C564	1-102-228-00	CERAMIC	470PF	10%	500V
C565	1-128-528-11	ELECT	470MF	20%	25V
C566	1-128-528-11	ELECT	470MF	20%	25V
C568	1-102-244-00	CERAMIC	220PF	10%	500V
C569	1-162-114-00	CERAMIC	0.0047MF		2KV
C570	1-162-116-00	CERAMIC	680PF	10%	2KV
C571	1-162-116-00	CERAMIC	680PF	10%	2KV
C572	1-106-359-00	MYLAR	0.0047MF	10%	200V
C573	1-107-875-91	ELECT	220MF	20%	10V
C575	1-102-038-00	CERAMIC	0.001MF		500V
C576	1-109-954-11	ELECT	0.47MF	20%	160V
C577	1-107-655-11	ELECT	47MF	20%	250V
C578	1-123-024-21	ELECT	33MF		160V
C579	1-104-664-11	ELECT	47MF	20%	25V
C581	1-137-374-11	FILM	0.047MF	5%	50V
C582	1-126-941-11	ELECT	470MF	20%	25V
C583	1-102-074-00	CERAMIC	0.001MF	10%	50V
C585	1-126-941-11	ELECT	470MF	20%	25V
C586	1-128-226-11	ELECT	220MF	20%	50V
C592	1-126-947-11	ELECT	47MF	20%	10V
C593	1-104-664-11	ELECT	47MF	20%	25V
C594	1-104-664-11	ELECT	47MF	20%	25V
C595	1-104-664-11	ELECT	47MF	20%	25V
C596	1-124-126-00	ELECT	47MF	20%	16V
C597	1-109-889-11	ELECT	1MF	20%	50V
C598	1-126-923-11	ELECT	220MF	20%	10V
C600	1-126-964-11	ELECT	10MF	20%	50V
C601	1-126-803-11	ELECT	47MF	20%	35V
C602	1-126-964-11	ELECT	10MF	20%	50V
C603	1-126-964-11	ELECT	10MF	20%	50V
C604	1-126-947-11	ELECT	47MF	20%	35V
C605	1-126-947-11	ELECT	47MF	20%	35V
C606	1-126-947-11	ELECT	47MF	20%	35V
C607	1-126-953-11	ELECT	2200MF	20%	35V
C609	1-126-953-11	ELECT	2200MF	20%	35V
C610	1-136-165-00	FILM	0.1MF	5%	50V
C611	1-136-165-00	FILM	0.1MF	5%	50V
C612	1-126-964-11	ELECT	10MF	20%	50V
C613	1-126-953-11	ELECT	2200MF	20%	35V
C615	1-130-471-00	MYLAR	0.001MF	5%	50V
C620	1-124-916-11	ELECT	22MF	20%	25V
C621	1-124-916-11	ELECT	22MF	20%	25V
C622	1-104-664-11	ELECT	47MF	20%	25V
C623	1-104-664-11	ELECT	47MF	20%	25V
C624	1-124-126-00	ELECT	47MF	20%	16V
C626	1-126-176-11	ELECT	220MF	20%	10V
C627	1-136-853-11	FILM	0.56MF	5%	200V
C628	1-124-443-00	ELECT	100MF	20%	6.3V
C630	1-107-995-11	ELECT	100MF	0	160V
C631	1-106-395-00	MYLAR	0.15MF	10%	200V
C632	1-137-399-11	FILM	0.1MF	5%	50V
C633	1-130-495-00	MYLAR	0.1MF	5%	50V
C634	1-107-910-11	ELECT	100MF	20%	50V
C642	1-104-797-11	ELECT	0.47MF	20%	50V
C643	1-102-002-00	CERAMIC	680PF	10%	500V
C644	1-136-165-00	FILM	0.1MF	5%	50V
C645	1-124-126-00	ELECT	47MF	20%	16V
C646	1-124-903-11	ELECT	1MF	20%	50V
C647	1-104-664-11	ELECT	47MF	20%	25V
C648	1-104-664-11	ELECT	47MF	20%	25V
C650	1-106-391-12	MYLAR	0.1MF	10%	200V
C651	1-162-117-00	CERAMIC	100PF	10%	500V
C652	1-162-117-00	CERAMIC	100PF	10%	500V
C654	1-107-995-11	ELECT	100MF	0	160V
C655	1-107-995-11	ELECT	100MF	0	160V
C656	1-126-934-11	ELECT	220MF	20%	16V

	<CONNECTOR>		
CN501	*1-573-986-11	PIN, CONNECTOR (PC BOARD) 5P	
CN502	1-573-296-11	CONNECTOR, BOARD TO BOARD 10P	
CN503	1-573-296-11	CONNECTOR, BOARD TO BOARD 10P	
CN504	1-573-296-11	CONNECTOR, BOARD TO BOARD 10P	
CN505	1-573-296-11	CONNECTOR, BOARD TO BOARD 10P	
CN507	*1-573-964-11	PIN, CONNECTOR (PC BOARD) 6P	
CN508	1-573-297-11	CONNECTOR, BOARD TO BOARD 18P	
CN509	1-573-297-11	CONNECTOR, BOARD TO BOARD 18P	
CN510	1-573-297-11	CONNECTOR, BOARD TO BOARD 18P	
CN511	1-573-297-11	CONNECTOR, BOARD TO BOARD 18P	
CN512	1-573-297-11	CONNECTOR, BOARD TO BOARD 18P	
CN513	*1-564-508-11	PLUG, CONNECTOR 5P	
CN514	*1-564-507-11	PLUG, CONNECTOR 4P	
CN515	*1-564-508-11	PLUG, CONNECTOR 5P	
CN516	1-573-297-11	CONNECTOR, BOARD TO BOARD 18P	
CN517	1-573-297-11	CONNECTOR, BOARD TO BOARD 18P	
CN530	1-573-296-11	CONNECTOR, BOARD TO BOARD 10P	
	<DIODE>		
D501	8-719-300-33	DIODE RU-3AM	
D503	8-719-979-99	DIODE ERD08M-15	
D505	8-719-979-85	DIODE EGP20G	
D509	8-719-970-87	DIODE ERA38-06	
D510	8-719-302-43	DIODE EL1Z	
D511	8-719-300-33	DIODE RU-3AM	
D512	8-719-931-04	DIODE ERD31-04	
D513	8-719-931-04	DIODE ERD31-04	
D516	8-719-018-82	DIODE RGP02-20EL-6394	
D520	8-719-908-03	DIODE GP08D	

REF.NO.	PART NO.	DESCRIPTION	REMARK
D521	8-719-110-78	DIODE RD33ESB2	
D522	8-719-911-19	DIODE 1SS119-25	
D523	8-719-911-19	DIODE 1SS119-25	
D524	8-719-028-72	DIODE RGP02-17EL-6433	
D525	8-719-109-88	DIODE RD5.6ESB1	
D530	8-719-510-48	DIODE D1N20R	
D531	8-719-510-48	DIODE D1N20R	
D532	8-719-110-90	DIODE RD39ESB4	
D533	8-719-981-00	DIODE ERB81-004	
D536	8-719-981-00	DIODE ERB81-004	
D540	8-719-109-88	DIODE RD5.6ESB1	
D542	8-719-911-19	DIODE 1SS119-25	
D543	8-719-911-19	DIODE 1SS119-25	
D544	8-719-911-19	DIODE 1SS119-25	
D545	8-719-911-19	DIODE 1SS119-25	
D546	8-719-945-80	DIODE ERC06-15S	
D547	8-719-911-19	DIODE 1SS119-25	
D548	8-719-911-19	DIODE 1SS119-25	
D549	8-719-109-88	DIODE RD5.6ESB1	
D550	8-719-109-88	DIODE RD5.6ESB1	
		<PLUG>	
DY1	*1-568-536-11	PLUG (MINIATURE DY) 6P	
		<FERRITE BEAD>	
FB501	1-410-397-21	FERRITE BEAD INDUCTOR 1.1UH	
FB502	1-410-396-41	INDUCTOR 0.45UH	
		<IC>	
IC504	8-759-192-71	IC STV9379	
IC505	8-759-168-24	IC TA8200AH	
IC506	8-759-231-58	IC TA7812S	
IC507	8-759-231-58	IC TA7812S	
IC508	8-759-231-58	IC TA7812S	
IC510	8-759-701-75	IC NJM7805FA	
IC511	8-759-701-59	IC NJM7809FA	
IC512	1-809-054-21	MODULE, PROTECTOR PM-28	
IC513	8-759-701-65	IC NJM79M05FA	
IC514	8-759-701-88	IC NJM7912FA	
IC515	8-759-701-75	IC NJM7805FA	
IC516	8-759-701-75	IC NJM7805FA	
IC517	8-759-231-58	IC TA7812S	
		<COIL>	
L501	1-406-972-11	COIL, CHOKE 15UH	
L502	1-406-671-11	COIL, CHOKE 1.0MMH	
L503	1-409-945-11	COIL, CHOKE (PMC) 120UH	
L504	1-459-123-00	COIL,DUST CORE(PAC)	
L506	1-459-105-21	COIL(WITH CORE)	
L508	1-412-519-11	INDUCTOR 3.3UH	
L509	1-412-519-11	INDUCTOR 3.3UH	
L510	1-412-523-41	INDUCTOR 6.8UH	
L512	1-412-552-11	INDUCTOR 2.2MMH	
L514	1-412-531-31	INDUCTOR 33UH	
L515	1-412-531-31	INDUCTOR 33UH	
L520	1-412-531-31	INDUCTOR 33UH	
L522	1-422-613-11	COIL, AIR CORE	
		<TRANSISTOR>	
Q504	8-729-119-80	TRANSISTOR 2SC2688-LK	
Q505	8-729-821-07	TRANSISTOR 2SC3997CA	
Q506	8-729-019-71	TRANSISTOR 2SK1916-53-F50	
Q508	8-729-140-96	TRANSISTOR 2SD774-34	
Q509	8-729-140-93	TRANSISTOR 2SB733-34	
Q510	8-729-821-07	TRANSISTOR 2SC3997CA	
Q516	8-729-303-47	TRANSISTOR 2SK552	
Q517	8-729-119-76	TRANSISTOR 2SA1175-HFE	
Q518	8-729-119-78	TRANSISTOR 2SC2785-HFE	
Q519	8-729-119-78	TRANSISTOR 2SC2785-HFE	
Q520	8-729-119-78	TRANSISTOR 2SC2785-HFE	
Q521	8-729-119-78	TRANSISTOR 2SC2785-HFE	
Q522	8-729-119-78	TRANSISTOR 2SC2785-HFE	
Q523	8-729-303-47	TRANSISTOR 2SK552	
Q524	8-729-119-78	TRANSISTOR 2SC2785-HFE	
Q525	8-729-119-78	TRANSISTOR 2SC2785-HFE	
Q531	8-729-119-80	TRANSISTOR 2SC2688-LK	
Q532	8-729-025-94	TRANSISTOR FS10SM-16	
Q534	8-729-119-76	TRANSISTOR 2SA1175-HFE	
		<RESISTOR>	
R522	1-249-411-11	CARBON 330 5% 1/4W	
R523	1-249-423-11	CARBON 3.3K 5% 1/4W	
R524	1-215-872-11	METAL OXIDE 3.3K 5% 1W	F
R525	1-216-478-11	METAL OXIDE 390 5% 3W	F
R526	1-216-478-11	METAL OXIDE 390 5% 3W	F
R527	1-215-880-00	METAL OXIDE 10 5% 2W	F
R528	1-249-397-11	CARBON 22 5% 1/4W	F
R529	1-249-393-11	CARBON 10 5% 1/4W	F
R530	1-249-393-11	CARBON 10 5% 1/4W	F
R531	1-249-425-11	CARBON 4.7K 5% 1/4W	
R533	1-215-899-11	METAL OXIDE 15K 5% 2W	F
R569	1-249-441-11	CARBON 100K 5% 1/4W	
R570	1-249-441-11	CARBON 100K 5% 1/4W	
R571	1-249-441-11	CARBON 100K 5% 1/4W	
R572	1-216-439-00	METAL OXIDE 12K 5% 1W	F
R573	1-216-459-00	METAL OXIDE 2.7K 5% 2W	F
R574	1-216-459-00	METAL OXIDE 2.7K 5% 2W	F
R575	1-202-830-00	SOLID 10K 20% 1/2W	
R576	1-215-425-00	METAL 1.5K 1% 1/4W	
R577	1-260-288-11	CARBON 0.47 5% 1/2W	
R578	1-260-288-11	CARBON 0.47 5% 1/2W	
R584	1-249-425-11	CARBON 4.7K 5% 1/4W	
R585	1-249-425-11	CARBON 4.7K 5% 1/4W	
R586	1-247-903-00	CARBON 1M 5% 1/4W	
R587	1-249-440-11	CARBON 82K 5% 1/4W	
R588	1-215-869-11	METAL OXIDE 1K 5% 1W	F
R589	1-249-441-11	CARBON 100K 5% 1/4W	
R590	1-247-901-11	CARBON 820K 5% 1/4W	
R591	1-215-881-11	METAL OXIDE 15 5% 2W	F
R592	1-260-320-11	CARBON 220 5% 1/2W	
R598	1-215-882-00	METAL OXIDE 22 5% 2W	F
R599	1-249-437-11	CARBON 47K 5% 1/4W	
R600	1-249-429-11	CARBON 10K 5% 1/4W	
R601	1-249-437-11	CARBON 47K 5% 1/4W	
R602	1-215-453-00	METAL 22K 1% 1/4W	
R604	1-215-455-00	METAL 27K 1% 1/4W	
R605	1-216-370-11	METAL OXIDE 1.2 5% 2W	F
R606	1-215-888-00	METAL OXIDE 220 5% 2W	F
R609	1-249-428-11	CARBON 8.2K 5% 1/4W	
R610	1-249-432-11	CARBON 18K 5% 1/4W	
R611	1-249-432-11	CARBON 18K 5% 1/4W	
R613	1-249-437-11	CARBON 47K 5% 1/4W	

Les composants identifies par une trame et une marque ⚠ sont critiques pour la securite. Ne les remplacer que par une piece portant le numero specifie.

The components identified by shading and mark ⚠ are critical for safety. Replace only with part number specified.

A M

REF.NO.	PART NO.	DESCRIPTION				REMARK
R614	1-249-421-11	CARBON	2.2K	5%	1/4W	
R615	1-249-409-11	CARBON	220	5%	1/4W	
R620	1-249-424-11	CARBON	3.9K	5%	1/4W	
R621	1-249-424-11	CARBON	3.9K	5%	1/4W	
R622	1-249-409-11	CARBON	220	5%	1/4W	
R623	1-249-425-11	CARBON	4.7K	5%	1/4W	
R624	1-249-425-11	CARBON	4.7K	5%	1/4W	
R625	1-249-409-11	CARBON	220	5%	1/4W	
R626	1-247-863-91	CARBON	22K	5%	1/4W	
R627	1-247-863-91	CARBON	22K	5%	1/4W	
R628	1-249-441-11	CARBON	100K	5%	1/4W	
R629	1-249-441-11	CARBON	100K	5%	1/4W	
R630	1-249-398-11	CARBON	27	5%	1/4W	F
R631	1-249-441-11	CARBON	100K	5%	1/4W	
R632	1-249-385-11	CARBON	2.2	5%	1/4W	F
R633	1-249-385-11	CARBON	2.2	5%	1/4W	F
R635	1-249-435-11	CARBON	33K	5%	1/4W	
R636	1-249-431-11	CARBON	15K	5%	1/4W	
R638	1-249-425-11	CARBON	4.7K	5%	1/4W	F
R639	1-249-417-11	CARBON	1K	5%	1/4W	
R640	1-216-381-11	METAL OXIDE	0.22	5%	3W	F
R641	1-249-417-11	CARBON	1K	5%	1/4W	F
R642	1-249-405-11	CARBON	100	5%	1/4W	F
R648	1-216-347-11	METAL OXIDE	0.68	5%	1W	F
R650	1-249-429-11	CARBON	10K	5%	1/4W	
R651	1-249-417-11	CARBON	1K	5%	1/4W	
R654	1-216-386-11	METAL OXIDE	0.56	5%	3W	F
R655	1-216-386-11	METAL OXIDE	0.56	5%	3W	F
R656	1-249-401-11	CARBON	47	5%	1/4W	
R657	1-249-425-11	CARBON	4.7K	5%	1/4W	
R658	1-215-924-00	METAL OXIDE	15K	5%	3W	F
R659	1-247-807-31	CARBON	100	5%	1/4W	
R661	1-249-429-11	CARBON	10K	5%	1/4W	
R662	1-249-417-11	CARBON	1K	5%	1/4W	
R663	1-202-830-00	SOLID	10K	20%	1/2W	
R664	1-260-288-11	CARBON	0.47	5%	1/2W	
R665	1-215-865-11	METAL OXIDE	220	5%	1W	F
R666	1-216-485-11	METAL OXIDE	5.6K	5%	3W	F
R667	1-216-485-11	METAL OXIDE	5.6K	5%	3W	F
R669	1-249-417-11	CARBON	1K	5%	1/4W	
R670	1-216-394-00	METAL OXIDE	2.7	5%	3W	F
R671	1-216-394-00	METAL OXIDE	2.7	5%	3W	F
R672	1-249-413-11	CARBON	470	5%	1/4W	F
R673	1-249-429-11	CARBON	10K	5%	1/4W	
R674	1-249-429-11	CARBON	10K	5%	1/4W	
R675	1-249-425-11	CARBON	4.7K	5%	1/4W	

<SPARK GAP>

SG501	1-519-422-11	GAP, SPARK

<TRANSFORMER>

T501	⚠1-437-209-11	TRANSFORMER, HORIZONTAL DRIVE
T502	⚠1-427-663-11	BLT
T503	1-427-628-11	TRANSFORMER, DYNAMIC FOCUS
T504	⚠1-453-150-11	TRANSFORMER ASSY, FLYBACK(NX-3041//J1T)
T505	1-427-666-11	TRANSFORMER, FERRITE (HOT)
T506	1-437-211-11	TRANSFORMER, HORIZONTAL DRIVE
T507	1-411-214-11	COIL, CHOKE 510UH

****

REF.NO.	PART NO.	DESCRIPTION				REMARK
	*A-1304-027-A	M BOARD, COMPLETE				
		**********				
	*1-526-950-11	SOCKET, IC 64P				

<CAPACITOR>

C801	1-126-933-11	ELECT	100MF	20%	10V
C802	1-163-035-00	CERAMIC CHIP	0.047MF		50V
C803	1-163-097-00	CERAMIC CHIP	15PF	5%	50V
C804	1-163-097-00	CERAMIC CHIP	15PF	5%	50V
C805	1-137-399-11	FILM	0.1MF	5%	50V
C806	1-163-035-00	CERAMIC CHIP	0.047MF		50V
C807	1-163-009-11	CERAMIC CHIP	0.001MF	10%	50V
C808	1-163-035-00	CERAMIC CHIP	0.047MF		50V
C809	1-163-035-00	CERAMIC CHIP	0.047MF		50V
C810	1-126-933-11	ELECT	100MF	20%	10V
C811	1-163-035-00	CERAMIC CHIP	0.047MF		50V
C812	1-163-035-00	CERAMIC CHIP	0.047MF		50V
C813	1-163-227-11	CERAMIC CHIP	10PF	0.5PF	50V
C814	1-163-224-11	CERAMIC CHIP	7PF	0.25PF	50V
C815	1-163-224-11	CERAMIC CHIP	7PF	0.25PF	50V
C816	1-124-925-11	ELECT	2.2MF	20%	50V
C817	1-164-232-11	CERAMIC CHIP	0.01MF	10%	50V
C870	1-130-477-00	FILM	0.0033MF	5%	50V
C883	1-163-035-00	CERAMIC CHIP	0.047MF		50V

<CONNECTOR>

CN801	1-573-965-21	PIN, CONNECTOR (PC BOARD) 50P
CN802	*1-564-520-11	PLUG, CONNECTOR 5P
CN803	1-564-523-11	PLUG, CONNECTOR 8P

<DIODE>

D801	8-719-404-46	DIODE MA110
D802	8-719-404-46	DIODE MA110
D803	8-719-404-46	DIODE MA110
D804	8-719-404-46	DIODE MA110
D805	8-719-404-46	DIODE MA110
D806	8-719-404-46	DIODE MA110
D807	8-719-404-46	DIODE MA110
D808	8-719-404-46	DIODE MA110
D809	8-719-404-46	DIODE MA110
D810	8-719-404-46	DIODE MA110
D811	8-719-404-46	DIODE MA110
D812	8-719-404-46	DIODE MA110
D813	8-719-404-46	DIODE MA110
D814	8-719-404-46	DIODE MA110

<IC>

IC801	8-759-325-79	IC HD6473257P10-PGM1
IC802	8-759-032-11	IC MC74HC04AF
IC803	8-759-083-63	IC UPD6453GT-625-E1
IC804	8-759-162-80	IC MM1170BFB
IC805	8-759-032-26	IC MC74HC125AF
IC806	8-759-156-54	IC X25040SI
IC808	8-759-008-74	IC MC14001BF

<COIL>

L801	1-408-421-00	INDUCTOR	100UH
L802	1-408-421-00	INDUCTOR	100UH
L803	1-408-411-00	INDUCTOR	15UH

REF.NO.	PART NO.	DESCRIPTION				REMARK
		<TRANSISTOR>				
Q801	8-729-120-28	TRANSISTOR 2SC1623-L5L6				
		<RESISTOR>				
R801	1-216-089-00	METAL GLAZE	47K	5%	1/10W	
R802	1-216-089-00	METAL GLAZE	47K	5%	1/10W	
R804	1-216-073-00	METAL GLAZE	10K	5%	1/10W	
R805	1-216-089-00	METAL GLAZE	47K	5%	1/10W	
R806	1-216-073-00	METAL GLAZE	10K	5%	1/10W	
R808	1-216-073-00	METAL GLAZE	10K	5%	1/10W	
R809	1-216-073-00	METAL GLAZE	10K	5%	1/10W	
R810	1-216-073-00	METAL GLAZE	10K	5%	1/10W	
R811	1-216-073-00	METAL GLAZE	10K	5%	1/10W	
R812	1-216-049-00	METAL GLAZE	1K	5%	1/10W	
R813	1-216-049-00	METAL GLAZE	1K	5%	1/10W	
R814	1-216-049-00	METAL GLAZE	1K	5%	1/10W	
R815	1-216-049-00	METAL GLAZE	1K	5%	1/10W	
R816	1-216-025-00	METAL GLAZE	100	5%	1/10W	
R817	1-216-049-00	METAL GLAZE	1K	5%	1/10W	
R818	1-216-049-00	METAL GLAZE	1K	5%	1/10W	
R819	1-216-049-00	METAL GLAZE	1K	5%	1/10W	
R821	1-216-049-00	METAL GLAZE	1K	5%	1/10W	
R822	1-216-049-00	METAL GLAZE	1K	5%	1/10W	
R823	1-216-025-00	METAL GLAZE	100	5%	1/10W	
R824	1-216-049-00	METAL GLAZE	1K	5%	1/10W	
R825	1-216-049-00	METAL GLAZE	1K	5%	1/10W	
R826	1-216-033-00	METAL GLAZE	220	5%	1/10W	
R827	1-216-049-00	METAL GLAZE	1K	5%	1/10W	
R828	1-216-049-00	METAL GLAZE	1K	5%	1/10W	
R829	1-216-033-00	METAL GLAZE	220	5%	1/10W	
R830	1-216-033-00	METAL GLAZE	220	5%	1/10W	
R831	1-216-089-00	METAL GLAZE	47K	5%	1/10W	
R832	1-216-089-00	METAL GLAZE	47K	5%	1/10W	
R833	1-216-089-00	METAL GLAZE	47K	5%	1/10W	
R834	1-216-049-00	METAL GLAZE	1K	5%	1/10W	
R835	1-216-049-00	METAL GLAZE	1K	5%	1/10W	
R836	1-216-073-00	METAL GLAZE	10K	5%	1/10W	
R837	1-216-049-00	METAL GLAZE	1K	5%	1/10W	
R838	1-216-037-00	METAL GLAZE	330	5%	1/10W	
R839	1-216-037-00	METAL GLAZE	330	5%	1/10W	
R840	1-216-025-00	METAL GLAZE	100	5%	1/10W	
R841	1-216-025-00	METAL GLAZE	100	5%	1/10W	
R842	1-216-073-00	METAL GLAZE	10K	5%	1/10W	
R843	1-216-073-00	METAL GLAZE	10K	5%	1/10W	
R844	1-216-033-00	METAL GLAZE	220	5%	1/10W	
R845	1-216-033-00	METAL GLAZE	220	5%	1/10W	
R846	1-216-067-00	METAL GLAZE	5.6K	5%	1/10W	
R848	1-216-025-00	METAL GLAZE	100	5%	1/10W	
R849	1-216-033-00	METAL GLAZE	220	5%	1/10W	
R850	1-216-033-00	METAL GLAZE	220	5%	1/10W	
R851	1-216-033-00	METAL GLAZE	220	5%	1/10W	
R852	1-216-025-00	METAL GLAZE	100	5%	1/10W	
R853	1-216-049-00	METAL GLAZE	1K	5%	1/10W	
R854	1-216-065-00	METAL GLAZE	4.7K	5%	1/10W	
R855	1-216-065-00	METAL GLAZE	4.7K	5%	1/10W	
R856	1-216-073-00	METAL GLAZE	10K	5%	1/10W	
R870	1-216-073-00	METAL GLAZE	10K	5%	1/10W	
R871	1-216-103-91	METAL GLAZE	180K	5%	1/10W	
R872	1-216-049-00	METAL GLAZE	1K	5%	1/10W	
R880	1-216-049-00	METAL GLAZE	1K	5%	1/10W	

REF.NO.	PART NO.	DESCRIPTION				REMARK
		<CRYSTAL>				
X801	1-760-040-11	VIBRATOR, CRYSTAL				
		**********				
	*A-1341-889-A	DX BOARD, COMPLETE				
		**********				
		<CAPACITOR>				
C1501	1-124-589-11	ELECT	47MF	20%	16V	
C1502	1-163-031-11	CERAMIC CHIP	0.01MF		50V	
C1504	1-136-165-00	FILM	0.1MF	5%	50V	
C1505	1-124-589-11	ELECT	47MF	20%	16V	
C1506	1-163-031-11	CERAMIC CHIP	0.01MF		50V	
C1507	1-163-809-11	CERAMIC CHIP	0.047MF	10%	25V	
C1508	1-163-809-11	CERAMIC CHIP	0.047MF	10%	25V	
C1509	1-128-013-11	ELECT CHIP	1MF	20%	50V	
C1510	1-163-809-11	CERAMIC CHIP	0.047MF	10%	25V	
C1511	1-128-013-11	ELECT CHIP	1MF	20%	50V	
C1512	1-128-013-11	ELECT CHIP	1MF	20%	50V	
C1513	1-124-589-11	ELECT	47MF	20%	16V	
C1514	1-164-232-11	CERAMIC CHIP	0.01MF	10%	50V	
C1516	1-124-589-11	ELECT	47MF	20%	16V	
C1517	1-163-031-11	CERAMIC CHIP	0.01MF		50V	
C1518	1-163-031-11	CERAMIC CHIP	0.01MF		50V	
C1520	1-163-031-11	CERAMIC CHIP	0.01MF		50V	
C1524	1-163-031-11	CERAMIC CHIP	0.01MF		50V	
C1526	1-163-031-11	CERAMIC CHIP	0.01MF		50V	
C1528	1-163-031-11	CERAMIC CHIP	0.01MF		50V	
C1529	1-163-031-11	CERAMIC CHIP	0.01MF		50V	
C1530	1-164-005-11	CERAMIC CHIP	0.47MF		25V	
C1531	1-163-809-11	CERAMIC CHIP	0.047MF	10%	25V	
C1532	1-163-031-11	CERAMIC CHIP	0.01MF		50V	
C1540	1-163-031-11	CERAMIC CHIP	0.01MF		50V	
C1544	1-163-031-11	CERAMIC CHIP	0.01MF		50V	
C1545	1-163-031-11	CERAMIC CHIP	0.01MF		50V	
C1546	1-128-004-11	ELECT CHIP	10MF	20%	16V	
C1547	1-163-031-11	CERAMIC CHIP	0.01MF		50V	
C1548	1-163-031-11	CERAMIC CHIP	0.01MF		50V	
C1549	1-163-031-11	CERAMIC CHIP	0.01MF		50V	
C1550	1-124-026-00	ELECT CHIP	1MF	20%	50V	
C1551	1-128-004-11	ELECT CHIP	10MF	20%	16V	
C1552	1-128-004-11	ELECT CHIP	10MF	20%	16V	
C1553	1-124-589-11	ELECT	47MF	20%	16V	
C1554	1-128-010-11	ELECT CHIP	0.22MF	20%	50V	
C1555	1-163-133-00	CERAMIC CHIP	470PF	5%	50V	
C1556	1-163-031-11	CERAMIC CHIP	0.01MF		50V	
C1557	1-104-559-11	FILM CHIP	0.047MF	5%	16V	
C1560	1-164-004-11	CERAMIC CHIP	0.1MF	10%	25V	
C1561	1-164-004-11	CERAMIC CHIP	0.1MF	10%	25V	
C1562	1-164-004-11	CERAMIC CHIP	0.1MF	10%	25V	
C1563	1-164-004-11	CERAMIC CHIP	0.1MF	10%	25V	
C1564	1-164-004-11	CERAMIC CHIP	0.1MF	10%	25V	
C1565	1-164-004-11	CERAMIC CHIP	0.1MF	10%	25V	
C1566	1-164-004-11	CERAMIC CHIP	0.1MF	10%	25V	
C1567	1-164-004-11	CERAMIC CHIP	0.1MF	10%	25V	
C1568	1-164-004-11	CERAMIC CHIP	0.1MF	10%	25V	
C1569	1-164-004-11	CERAMIC CHIP	0.1MF	10%	25V	
C1570	1-163-141-00	CERAMIC CHIP	0.001MF	5%	50V	
C1571	1-163-117-00	CERAMIC CHIP	100PF	5%	50V	
C1572	1-163-117-00	CERAMIC CHIP	100PF	5%	50V	
C1573	1-163-117-00	CERAMIC CHIP	100PF	5%	50V	

DX

REF.NO.	PART NO.	DESCRIPTION	REMARK
		<CONNECTOR>	
CN1501	1-573-965-21	PIN, CONNECTOR (PC BOARD) 50P	
		<DIODE>	
D1501	8-719-104-34	DIODE 1S2836	
		<IC>	
IC1501	8-752-065-79	IC CXA1470AM-T6	
IC1502	8-759-041-45	IC DAC8840FS	
IC1503	8-759-041-45	IC DAC8840FS	
IC1504	8-759-080-95	IC M62353FP	
IC1505	8-752-066-34	IC CXA1726M-T6	
IC1513	8-759-100-96	IC UPC4558G2	
IC1514	8-759-100-96	IC UPC4558G2	
IC1515	8-759-100-96	IC UPC4558G2	
IC1524	8-759-100-96	IC UPC4558G2	
IC1526	8-759-100-96	IC UPC4558G2	
IC1531	8-759-032-23	IC MC74HC74AF	
IC1532	8-759-032-23	IC MC74HC74AF	
IC1533	8-759-235-02	IC TC74HC00AF-TP2	
IC1534	8-759-236-47	IC TC74HC164AF(EL)	
IC1535	8-759-236-47	IC TC74HC164AF(EL)	
IC1536	8-759-008-98	IC MC14040BF	
IC1537	8-759-032-16	IC MC74HC08AF-T2	
IC1538	8-759-032-20	IC MC74HC32AF	
IC1539	8-759-300-71	IC HD14053BFP	
IC1540	8-759-032-23	IC MC74HC74AF	
		<COIL>	
L1501	1-412-525-31	INDUCTOR 10UH	
		<TRANSISTOR>	
Q1504	8-729-901-02	TRANSISTOR DTC124XK	
Q1506	8-729-120-28	TRANSISTOR 2SC1623-L5L6	
Q1507	8-729-120-28	TRANSISTOR 2SC1623-L5L6	
		<RESISTOR>	
R1502	1-216-057-00	METAL GLAZE 2.2K 5% 1/10W	
R1503	1-216-025-00	METAL GLAZE 100 5% 1/10W	
R1504	1-216-692-11	METAL CHIP 51K 0.50% 1/10W	
R1505	1-216-663-11	METAL CHIP 3.3K 0.50% 1/10W	
R1506	1-216-659-11	METAL CHIP 2.2K 0.50% 1/10W	
R1507	1-216-121-00	METAL GLAZE 1M 5% 1/10W	
R1508	1-216-105-91	METAL GLAZE 220K 5% 1/10W	
R1510	1-208-814-11	METAL CHIP 22K 0.50% 1/10W	
R1511	1-208-814-11	METAL CHIP 22K 0.50% 1/10W	
R1512	1-216-651-11	METAL CHIP 1K 0.50% 1/10W	
R1513	1-216-656-11	METAL CHIP 1.6K 0.50% 1/10W	
R1517	1-216-089-00	METAL GLAZE 47K 5% 1/10W	
R1518	1-216-073-00	METAL GLAZE 10K 5% 1/10W	
R1519	1-216-065-00	METAL GLAZE 4.7K 5% 1/10W	
R1526	1-216-687-11	METAL CHIP 33K 0.50% 1/10W	
R1527	1-216-065-00	METAL GLAZE 4.7K 5% 1/10W	
R1528	1-216-073-00	METAL GLAZE 10K 5% 1/10W	
R1529	1-216-675-11	METAL CHIP 10K 0.50% 1/10W	
R1530	1-216-089-00	METAL GLAZE 47K 5% 1/10W	
R1531	1-216-073-00	METAL GLAZE 10K 5% 1/10W	
R1532	1-216-073-00	METAL GLAZE 10K 5% 1/10W	
R1533	1-216-073-00	METAL GLAZE 10K 5% 1/10W	
R1534	1-216-073-00	METAL GLAZE 10K 5% 1/10W	
R1535	1-216-083-00	METAL GLAZE 27K 5% 1/10W	
R1537	1-216-663-11	METAL CHIP 3.3K 0.50% 1/10W	
R1538	1-216-649-11	METAL CHIP 820 0.50% 1/10W	
R1541	1-216-089-00	METAL GLAZE 47K 5% 1/10W	
R1542	1-216-689-11	METAL GLAZE 39K 5% 1/10W	
R1560	1-216-073-00	METAL GLAZE 10K 5% 1/10W	
R1561	1-216-073-00	METAL GLAZE 10K 5% 1/10W	
R1562	1-216-691-11	METAL CHIP 47K 0.50% 1/10W	
R1566	1-216-073-00	METAL GLAZE 10K 5% 1/10W	
R1567	1-216-093-00	METAL GLAZE 68K 5% 1/10W	
R1568	1-216-117-00	METAL GLAZE 680K 5% 1/10W	
R1569	1-216-089-00	METAL GLAZE 47K 5% 1/10W	
R1570	1-216-079-00	METAL GLAZE 18K 5% 1/10W	
R1571	1-216-069-00	METAL GLAZE 6.8K 5% 1/10W	
R1572	1-216-065-00	METAL GLAZE 4.7K 5% 1/10W	
R1574	1-216-083-00	METAL GLAZE 27K 5% 1/10W	
R1575	1-216-081-00	METAL GLAZE 22K 5% 1/10W	
R1576	1-216-081-00	METAL GLAZE 22K 5% 1/10W	
R1577	1-216-689-11	METAL CHIP 39K 0.50% 1/10W	
R1578	1-216-057-00	METAL GLAZE 2.2K 5% 1/10W	
R1579	1-216-057-00	METAL GLAZE 2.2K 5% 1/10W	
R1580	1-216-685-11	METAL CHIP 27K 0.50% 1/10W	
R1581	1-216-665-11	METAL CHIP 3.9K 0.50% 1/10W	
R1583	1-216-037-00	METAL GLAZE 330 5% 1/10W	
R1584	1-216-673-11	METAL CHIP 8.2K 0.50% 1/10W	
R1585	1-208-784-11	METAL CHIP 1.2K 0.50% 1/10W	
R1586	1-216-075-00	METAL GLAZE 12K 5% 1/10W	
R1587	1-216-103-91	METAL GLAZE 180K 5% 1/10W	
R1588	1-216-085-00	METAL GLAZE 33K 5% 1/10W	
R1590	1-216-075-00	METAL GLAZE 12K 5% 1/10W	
R1591	1-216-675-11	METAL CHIP 10K 0.50% 1/10W	
R1592	1-208-814-11	METAL CHIP 22K 0.50% 1/10W	
R1593	1-208-814-11	METAL CHIP 22K 0.50% 1/10W	
R1594	1-216-697-91	METAL CHIP 82K 0.50% 1/10W	
R1596	1-216-073-00	METAL GLAZE 10K 5% 1/10W	
R1597	1-208-814-11	METAL CHIP 22K 0.50% 1/10W	
R1598	1-208-814-11	METAL CHIP 22K 0.50% 1/10W	
R2601	1-216-659-11	METAL CHIP 2.2K 0.50% 1/10W	
R2602	1-216-663-11	METAL CHIP 3.3K 0.50% 1/10W	
R2603	1-216-105-91	METAL GLAZE 220K 5% 1/10W	
R2606	1-216-645-11	METAL CHIP 560 0.50% 1/10W	
R2609	1-216-105-91	METAL GLAZE 220K 5% 1/10W	
R2610	1-216-105-91	METAL GLAZE 220K 5% 1/10W	
R2611	1-216-065-00	METAL GLAZE 4.7K 5% 1/10W	
R2612	1-216-081-00	METAL GLAZE 22K 5% 1/10W	
R2613	1-216-105-91	METAL GLAZE 220K 5% 1/10W	
R2614	1-216-105-91	METAL GLAZE 220K 5% 1/10W	
R2615	1-216-069-00	METAL GLAZE 6.8K 5% 1/10W	
R2616	1-216-081-00	METAL GLAZE 22K 5% 1/10W	
R2617	1-216-073-00	METAL GLAZE 10K 5% 1/10W	
R2618	1-216-073-00	METAL GLAZE 10K 5% 1/10W	
R2619	1-216-675-11	METAL CHIP 10K 0.50% 1/10W	
R2620	1-216-675-11	METAL CHIP 10K 0.50% 1/10W	
R2621	1-216-057-00	METAL GLAZE 2.2K 5% 1/10W	
R2622	1-216-673-11	METAL CHIP 8.2K 0.50% 1/10W	
R2623	1-216-667-11	METAL CHIP 4.7K 0.50% 1/10W	
R2624	1-216-079-00	METAL GLAZE 18K 5% 1/10W	
R2625	1-216-099-00	METAL GLAZE 120K 5% 1/10W	
R2626	1-216-091-00	METAL GLAZE 56K 5% 1/10W	
R2628	1-216-085-00	METAL GLAZE 33K 5% 1/10W	

The components identified by shading and mark ⚠ are critical for safety.
Replace only with part number specified.

Les composants identifies par une trame et une marque ⚠ sont critiques pour la securite.
Ne les remplacer que par une piece portant le numero specifie.

DX G1 G (PGM-2950)

REF.NO.	PART NO.	DESCRIPTION				REMARK
R2629	1-216-037-00	METAL GLAZE	330	5%	1/10W	
R2630	1-216-651-11	METAL CHIP	1K	0.50%	1/10W	
R2631	1-216-675-11	METAL CHIP	10K	0.50%	1/10W	
R2632	1-216-691-11	METAL CHIP	47K	0.50%	1/10W	
**********						
	A-1311-427-A	G1 BOARD, COMPLETE (PGM-2950E) **********				
	A-1311-428-A	G1 BOARD, COMPLETE (PGM-2950) **********				
		<CAPACITOR>				
C601	1-162-599-12	CERAMIC	0.0047MF	20%	400V	
C619	1-161-744-71	CERAMIC	0.01MF		400V	
		<CONNECTOR>				
CN602	*1-508-786-00	PIN, CONNECTOR (5MM PITCH) 2P				
CN603	*1-573-963-11	PIN, CONNECTOR (PC BOARD) 3P				
CN604	*1-573-963-11	PIN, CONNECTOR (PC BOARD) 3P				
CN610	*1-691-134-11	PIN, CONNECTOR (PC BOARD) 2P				
CN611	*1-537-711-11	TAB, FASTEN (PCB)				
		<THERMISTOR>				
THP601	1-809-539-11	THERMISTOR, POSITIVE (PGM-2950)				
THP601	1-809-827-11	THERMISTOR, POSITIVE (PGM-2950E)				
**********						
	*A-1316-196-A	G BOARD, COMPLETE (PGM-2950) **********				
	4-382-854-11	SCREW (M3X10), P, SW (+)				
		<CAPACITOR>				
C602	⚠1-137-524-11	FILM	0.22MF	20%	250V	
C603	⚠1-137-524-11	FILM	0.22MF	20%	250V	
C604	⚠1-162-599-12	CERAMIC	0.0047MF	20%	400V	
C605	⚠1-162-599-12	CERAMIC	0.0047MF	20%	400V	
C606	1-104-346-11	ELECT	1000MF	99%	200V	
C610	1-136-619-11	FILM	0.0016MF	3%	2KV	
C611	1-106-349-00	MYLAR	0.0018MF	10%	100V	
C612	1-124-927-11	ELECT	4.7MF	20%	50V	
C613	1-126-949-11	ELECT	220MF	20%	35V	
C615	⚠1-162-599-12	CERAMIC	0.0047MF	20%	400V	
C616	⚠1-162-599-12	CERAMIC	0.0047MF	20%	400V	
C617	1-102-116-00	CERAMIC	680PF	10%	50V	
C618	1-102-116-00	CERAMIC	680PF	10%	50V	
C620	1-161-754-00	CERAMIC	0.001MF	10%	2KV	
C621	1-110-484-11	ELECT	820MF	0	160V	
C622	1-126-933-11	ELECT	100MF	20%	10V	
C625	1-162-318-11	CERAMIC	0.001MF	10%	500V	
C626	1-104-868-11	ELECT	2200MF	20%	25V	
C627	1-162-318-11	CERAMIC	0.001MF	10%	500V	
C628	1-104-868-11	ELECT	2200MF	20%	25V	
C629	1-162-318-11	CERAMIC	0.001MF	10%	500V	
C630	1-124-602-00	ELECT	2200MF	20%	35V	
C640	1-126-972-11	ELECT	1000MF	20%	50V	
C642	1-124-122-11	ELECT	100MF	20%	50V	
C643	1-126-964-11	ELECT	10MF	20%	50V	
C644	1-126-964-11	ELECT	10MF	20%	50V	
C645	1-126-925-11	ELECT	470MF	20%	10V	
C646	1-126-964-11	ELECT	10MF	20%	50V	
C647	1-126-934-11	ELECT	220MF	20%	16V	
C660	⚠1-161-742-00	CERAMIC	0.0022MF	20%	400V	
C661	⚠1-161-742-00	CERAMIC	0.0022MF	20%	400V	
		<CONNECTOR>				
CN601	*1-580-843-11	PIN, CONNECTOR (POWER)				
CN605	*1-564-508-11	PLUG, CONNECTOR 5P				
CN606	*1-573-986-11	PIN, CONNECTOR (PC BOARD) 5P				
CN607	*1-564-507-11	PLUG, CONNECTOR 4P				
CN609	*1-691-134-11	PIN, CONNECTOR (PC BOARD) 2P				
		<DIODE>				
D601	8-719-022-99	DIODE D6SB60L				
D604	8-719-979-58	DIODE EGP10D				
D605	8-719-911-19	DIODE 1SS119-25				
D607	8-719-979-58	DIODE EGP10D				
D620	8-719-029-04	DIODE D5L60				
D621	8-719-045-48	DIODE FML-G12S				
D622	8-719-920-67	DIODE ERC91-02				
D623	8-719-920-67	DIODE ERC91-02				
D625	8-719-911-19	DIODE 1SS119-25				
D640	8-719-511-40	DIODE S1VB40				
D641	8-719-911-19	DIODE 1SS119-25				
D643	8-719-911-19	DIODE 1SS119-25				
D645	8-719-110-36	DIODE RD13ESB2				
D646	8-719-911-19	DIODE 1SS119-25				
D647	8-719-109-89	DIODE RD5.6ESB2				
D648	8-719-911-19	DIODE 1SS119-25				
		<FUSE>				
F601	⚠1-532-748-11	FUSE, GLASS TUBE 6.3A/125V				
	1-533-223-11	CLIP, FUSE				
		<FERRITE BEAD>				
FB601	1-410-397-21	FERRITE BEAD INDUCTOR 1.1UH				
FB604	1-410-396-41	FERRITE BEAD INDUCTOR 0.45UH				
FB605	1-410-396-41	FERRITE BEAD INDUCTOR 0.45UH				
FB609	1-410-396-41	FERRITE BEAD INDUCTOR 0.45UH				
FB611	1-410-396-41	FERRITE BEAD INDUCTOR 0.45UH				
FB620	1-410-396-41	FERRITE BEAD INDUCTOR 0.45UH				
FB621	1-410-396-41	FERRITE BEAD INDUCTOR 0.45UH				
FB622	1-410-396-41	FERRITE BEAD INDUCTOR 0.45UH				
FB623	1-410-396-41	FERRITE BEAD INDUCTOR 0.45UH				
		<IC>				
IC601	8-749-010-03	IC STR-M6515A				
IC620	8-749-921-89	IC SE115N				
IC641	8-759-701-56	IC NJM78M05FA				
		<COIL>				
L620	1-406-663-21	COIL, CHOKE 47UH				
L621	1-406-663-21	COIL, CHOKE 47UH				
L622	1-412-533-21	INDUCTOR 47UH				
L623	1-412-527-11	INDUCTOR 15UH				
L624	1-412-527-11	INDUCTOR 15UH				

G (PGM-2950) G (PGM-2950E)

The components identified by shading and mark ⚠ are critical for safety.
Replace only with part number specified.

Les composants identifies par une trame et une marque ⚠ sont critiques pour la securite.
Ne les remplacer que par une piece portant le numero specifie.

REF.NO.	PART NO.	DESCRIPTION				REMARK
		<PHOTO COUPLER>				
PH602	⚠8-749-923-50	PHOTO COUPLER PC111YS				
		<IC LINK>				
PS620	⚠1-532-686-21	LINK, IC				
PS622	⚠1-532-686-21	LINK, IC				
		<TRANSISTOR>				
Q601	8-729-119-78	TRANSISTOR 2SC2785-HFE				
Q620	8-729-119-78	TRANSISTOR 2SC2785-HFE				
Q621	8-729-119-76	TRANSISTOR 2SA1175-HFE				
Q641	8-729-119-78	TRANSISTOR 2SC2785-HFE				
Q642	8-729-119-78	TRANSISTOR 2SC2785-HFE				
Q643	8-729-140-96	TRANSISTOR 2SD774-34				
Q644	8-729-140-97	TRANSISTOR 2SB734-34				
Q645	8-729-119-78	TRANSISTOR 2SC2785-HFE				
Q646	8-729-119-78	TRANSISTOR 2SC2785-HFE				
		<RESISTOR>				
R601	⚠1-202-719-00	SOLID	1M	20%	1/2W	
R602	1-202-981-11	WIREWOUND	0.82	5%	20W	
R603	1-215-928-11	METAL OXIDE	68K	5%	3W	F
R605	1-217-190-21	WIREWOUND	0.15	10%	2W	F
R606	1-216-381-11	METAL OXIDE	0.22	5%	3W	F
R607	1-249-415-11	CARBON	680	5%	1/4W	
R608	1-249-418-11	CARBON	1.2K	5%	1/4W	
R610	1-249-424-11	CARBON	3.9K	5%	1/4W	F
R611	1-249-424-11	CARBON	3.9K	5%	1/4W	F
R613	1-249-417-11	CARBON	1K	5%	1/4W	
R614	1-249-388-11	CARBON	3.9	5%	1/4W	F
R615	1-249-417-11	CARBON	1K	5%	1/4W	
R619	1-249-421-11	CARBON	2.2K	5%	1/4W	
R620	⚠1-218-265-11	METAL	8.2M	5%	1W	
R627	1-249-377-11	CARBON	0.47	5%	1/4W	F
R628	1-249-377-11	CARBON	0.47	5%	1/4W	F
R629	1-249-377-11	CARBON	0.47	5%	1/4W	F
R630	1-249-437-11	CARBON	47K	5%	1/4W	
R631	1-215-472-00	METAL	130K	1%	1/4W	
R632	1-216-383-11	METAL OXIDE	0.33	5%	3W	F
R633	1-216-383-11	METAL OXIDE	0.33	5%	3W	F
R634	1-215-444-00	METAL	9.1K	1%	1/4W	
R635	1-215-450-00	METAL	16K	1%	1/4W	
R636	1-216-482-11	METAL OXIDE	1.8K	5%	3W	F
R637	1-216-357-00	METAL OXIDE	4.7	5%	1W	F
R638	1-247-863-91	CARBON	22K	5%	1/4W	
R642	1-216-356-00	METAL OXIDE	3.9	5%	1W	F
R643	1-249-427-11	CARBON	6.8K	5%	1/4W	
R644	1-249-427-11	CARBON	6.8K	5%	1/4W	
R645	1-247-863-91	CARBON	22K	5%	1/4W	
R646	1-249-424-11	CARBON	3.9K	5%	1/4W	
R647	1-249-429-11	CARBON	10K	5%	1/4W	
R648	1-249-417-11	CARBON	1K	5%	1/4W	
R649	1-247-895-00	CARBON	470K	5%	1/4W	
R650	1-249-438-11	CARBON	56K	5%	1/4W	
R651	1-215-450-00	METAL	16K	1%	1/4W	
R652	1-249-425-11	CARBON	4.7K	5%	1/4W	
R653	1-249-437-11	CARBON	47K	5%	1/4W	
R654	1-249-429-11	CARBON	10K	5%	1/4W	
R655	1-249-424-11	CARBON	3.9K	5%	1/4W	
R656	1-249-429-11	CARBON	10K	5%	1/4W	
R657	1-211-786-71	FUSIBLE	82	5%	1/4W	F
R660	⚠1-247-903-00	CARBON	1M	5%	1/4W	
		<RELAY>				
RY601	⚠1-515-849-11	RELAY				
RY602	⚠1-515-738-11	RELAY				
		<TRANSFORMER>				
T601	⚠1-424-248-11	TRANSFORMER, LINE FILTER				
T602	⚠1-424-248-11	TRANSFORMER, LINE FILTER				
T603	⚠1-426-946-21	TRANSFORMER, POWER				
T604	⚠1-427-658-11	TRANSFORMER, CONVERTER (SBT)				
		<VARISTOR>				
VDR601	⚠1-809-786-11	VARISTOR				

****

*A-1316-217-A G BOARD, COMPLETE (PGM-2950E)
****

4-382-854-11 SCREW (M3X10), P, SW (+)

REF.NO.	PART NO.	DESCRIPTION			
		<CAPACITOR>			
C602	⚠1-104-706-11	FILM	0.22MF	20%	250V
C603	⚠1-104-706-11	FILM	0.22MF	20%	250V
C604	⚠1-162-599-12	CERAMIC	0.0047MF	20%	400V
C605	⚠1-162-599-12	CERAMIC	0.0047MF	20%	400V
C607	1-137-485-11	FILM	0.68MF	10%	630V
C608	1-137-485-11	FILM	0.68MF	10%	630V
C609	1-136-206-11	FILM	0.033MF	10%	630V
C610	1-136-538-11	FILM	0.001MF	3%	2KV
C611	1-106-353-00	MYLAR	0.0027MF	10%	100V
C612	1-124-927-11	ELECT	4.7MF	20%	50V
C613	1-126-949-11	ELECT	220MF	20%	35V
C614	1-126-233-11	ELECT	22MF	20%	50V
C615	⚠1-162-599-12	CERAMIC	0.0047MF	20%	400V
C616	⚠1-162-599-12	CERAMIC	0.0047MF	20%	400V
C618	1-162-115-00	CERAMIC	330PF	10%	2KV
C620	1-161-754-00	CERAMIC	0.001MF	10%	2KV
C621	1-110-485-11	ELECT	1200MF	0	160V
C622	1-126-923-11	ELECT	220MF	20%	10V
C623	1-130-783-00	MYLAR	0.33MF	10%	100V
C624	1-107-637-11	ELECT	22MF	20%	160V
C625	1-164-645-11	CERAMIC	1000PF	10%	500V
C626	1-104-868-11	ELECT	2200MF	20%	25V
C627	1-162-318-11	CERAMIC	0.001MF	10%	500V
C628	1-104-868-11	ELECT	2200MF	20%	25V
C629	1-162-318-11	CERAMIC	0.001MF	10%	500V
C630	1-124-602-00	ELECT	2200MF	20%	35V
C640	1-126-951-11	ELECT	470MF	20%	35V
C642	1-126-967-11	ELECT	47MF	20%	50V
C643	1-126-964-11	ELECT	10MF	20%	50V
C644	1-126-964-11	ELECT	10MF	20%	50V
C645	1-126-933-11	ELECT	100MF	20%	10V
C646	1-126-964-11	ELECT	10MF	20%	50V
C647	1-126-933-11	ELECT	100MF	20%	16V
C660	⚠1-161-742-00	CERAMIC	0.0022MF	20%	400V
C661	⚠1-161-742-00	CERAMIC	0.0022MF	20%	400V
		<CONNECTOR>			
CN601	*1-580-843-11	PIN, CONNECTOR (POWER)			

Les composants identifies par une trame et une marque ⚠ sont critiques pour la securite. Ne les remplacer que par une piece portant le numero specifie.

The components identified by shading and mark ⚠ are critical for safety. Replace only with part number specified.

G (PGM-2950E)

REF.NO.	PART NO.	DESCRIPTION	REMARK
CN605	*1-564-508-11	PLUG, CONNECTOR 5P	
CN606	*1-573-986-11	PIN, CONNECTOR (PC BOARD) 5P	
CN607	*1-564-507-11	PLUG, CONNECTOR 4P	
CN609	*1-691-134-11	PIN, CONNECTOR (PC BOARD) 2P	
		<DIODE>	
D601	8-719-510-53	DIODE D4SB60L	
D603	8-719-302-98	DIODE RG4C	
D604	8-719-979-58	DIODE EGP10D	
D605	8-719-911-19	DIODE 1SS119-25	
D607	8-719-979-58	DIODE EGP10D	
D620	8-719-029-04	DIODE D5L60	
D621	8-719-045-48	DIODE FML-G12S	
D622	8-719-045-48	DIODE FML-G12S	
D623	8-719-920-67	DIODE ERC91-02	
D625	8-719-911-19	DIODE 1SS119-25	
D640	8-719-511-40	DIODE S1VB40	
D641	8-719-911-19	DIODE 1SS119-25	
D643	8-719-911-19	DIODE 1SS119-25	
D645	8-719-110-36	DIODE RD13ESB2	
D646	8-719-911-19	DIODE 1SS119-25	
		<FUSE>	
F601	⚠1-576-232-11	FUSE (N.B.C.)	
	1-533-223-11	CLIP, FUSE	
		<FERRITE BEAD>	
FB601	1-410-397-21	FERRITE BEAD INDUCTOR 1.1UH	
FB603	1-410-396-41	FERRITE BEAD INDUCTOR 0.45UH	
FB604	1-410-396-41	FERRITE BEAD INDUCTOR 0.45UH	
FB605	1-410-396-41	FERRITE BEAD INDUCTOR 0.45UH	
FB607	1-410-396-41	FERRITE BEAD INDUCTOR 0.45UH	
FB608	1-410-396-41	FERRITE BEAD INDUCTOR 0.45UH	
FB609	1-410-396-41	FERRITE BEAD INDUCTOR 0.45UH	
FB610	1-410-396-41	FERRITE BEAD INDUCTOR 0.45UH	
FB621	1-410-396-41	FERRITE BEAD INDUCTOR 0.45UH	
FB622	1-410-396-41	FERRITE BEAD INDUCTOR 0.45UH	
FB623	1-410-396-41	FERRITE BEAD INDUCTOR 0.45UH	
		<IC>	
IC601	8-749-925-03	IC STR-M6524	
IC620	8-749-010-47	IC STR-S3115	
IC641	8-759-701-56	IC NJM78M05FA	
		<COIL>	
L601	1-459-946-11	COIL, NOISE FILTER	
L620	1-406-663-21	COIL, CHOKE 47UH	
L621	1-412-527-11	INDUCTOR 15UH	
L622	1-412-533-21	INDUCTOR 47UH	
L623	1-412-527-11	INDUCTOR 15UH	
L624	1-412-527-11	INDUCTOR 15UH	
		<PHOTO COUPLER>	
PH602	⚠8-749-923-50	PHOTO COUPLER PC111YS	
		<IC LINK>	
PS620	⚠1-532-686-21	LINK, IC	
PS621	⚠1-532-686-21	LINK, IC	
PS622	⚠1-532-984-11	LINK, IC	
PS623	⚠1-532-984-11	LINK, IC	
		<TRANSISTOR>	
Q601	8-729-119-76	TRANSISTOR 2SA1175-HFE	
Q602	8-729-119-78	TRANSISTOR 2SC2785-HFE	
Q620	8-729-119-78	TRANSISTOR 2SC2785-HFE	
Q621	8-729-119-76	TRANSISTOR 2SA1175-HFE	
Q641	8-729-119-78	TRANSISTOR 2SC2785-HFE	
Q642	8-729-119-78	TRANSISTOR 2SC2785-HFE	
Q643	8-729-140-96	TRANSISTOR 2SD774-34	
		<RESISTOR>	

R601	⚠1-202-719-00	SOLID	1M	20%	1/2W	
R602	1-215-929-11	METAL OXIDE	100K	5%	3W	F
R603	1-216-492-11	METAL OXIDE	82K	5%	3W	F
R604	1-215-929-11	METAL OXIDE	100K	5%	3W	F
R605	1-216-381-11	METAL OXIDE	0.22	5%	3W	F
R606	1-216-381-11	METAL OXIDE	0.22	5%	3W	F
R607	1-249-415-11	CARBON	680	5%	1/4W	
R608	1-249-418-11	CARBON	1.2K	5%	1/4W	
R609	1-249-437-11	CARBON	47K	5%	1/4W	F
R610	1-249-424-11	CARBON	3.9K	5%	1/4W	F
R611	1-249-424-11	CARBON	3.9K	5%	1/4W	F
R613	1-249-417-11	CARBON	1K	5%	1/4W	
R614	1-249-385-11	CARBON	2.2	5%	1/4W	F
R615	1-249-417-11	CARBON	1K	5%	1/4W	
R616	1-249-417-11	CARBON	1K	5%	1/4W	
R617	1-247-811-31	CARBON	150	5%	1/4W	
R618	1-249-419-11	CARBON	1.5K	5%	1/4W	
R619	1-249-421-11	CARBON	2.2K	5%	1/4W	
R627	1-249-377-11	CARBON	0.47	5%	1/4W	F
R628	1-249-377-11	CARBON	0.47	5%	1/4W	F
R629	1-249-377-11	CARBON	0.47	5%	1/4W	F
R630	1-249-437-11	CARBON	47K	5%	1/4W	
R631	1-215-462-00	METAL	51K	1%	1/4W	
R632	1-216-381-11	METAL OXIDE	0.22	5%	3W	F
R633	1-216-381-11	METAL OXIDE	0.22	5%	3W	F
R634	1-215-431-00	METAL	2.7K	1%	1/4W	
R636	1-216-482-11	METAL OXIDE	1.8K	5%	3W	F
R637	1-216-357-00	METAL OXIDE	4.7	5%	1W	F
R638	1-247-863-91	CARBON	22K	5%	1/4W	
R639	1-259-884-11	CARBON	4.7M	5%	1/4W	
R642	1-216-422-11	METAL OXIDE	18	5%	1W	F
R643	1-249-427-11	CARBON	6.8K	5%	1/4W	
R644	1-249-427-11	CARBON	6.8K	5%	1/4W	
R645	1-247-863-91	CARBON	22K	5%	1/4W	
R646	1-249-424-11	CARBON	3.9K	5%	1/4W	
R647	1-249-429-11	CARBON	10K	5%	1/4W	
R648	1-249-417-11	CARBON	1K	5%	1/4W	
R649	1-247-895-00	CARBON	470K	5%	1/4W	
R657	1-211-788-71	FUSIBLE	120	5%	1/4W	F
R660	1-247-903-00	CARBON	1M	5%	1/4W	
R661	1-216-492-11	METAL OXIDE	82K	5%	3W	F

		<RELAY>
RY601	⚠1-515-738-11	RELAY
RY602	⚠1-515-738-11	RELAY

Les composants identifies par une trame et une marque ⚠ sont critiques pour la securite. Ne les remplacer que par une piece portant le numero specifie.

The components identified by shading and mark ⚠ are critical for safety. Replace only with part number specified.

G (PGM-2950E) C

REF.NO.	PART NO.	DESCRIPTION	REMARK

<TRANSFORMER>

T601	⚠1-426-716-11	TRANSFORMER, LINE FILTER (LFT)	
T602	⚠1-426-716-11	TRANSFORMER, LINE FILTER (LFT)	
T603	⚠1-426-945-11	TRANSFORMER, POWER	
T604	⚠1-427-657-11	TRANSFORMER, CONVERTER (SRT)	

<VARISTOR>

VDR601	⚠1-810-271-21	VARISTOR ZNR-14DK471U	

****

*A-1331-380-A C BOARD, COMPLETE
****

<CAPACITOR>

C701	1-126-326-51	ELECT	10MF	20%	250V
C702	1-126-326-51	ELECT	10MF	20%	250V
C703	1-126-326-51	ELECT	10MF	20%	250V
C704	1-104-792-51	ELECT	33MF	20%	16V
C705	1-104-792-51	ELECT	33MF	20%	16V
C706	1-104-792-51	ELECT	33MF	20%	16V
C707	1-102-129-00	CERAMIC	0.01MF	10%	50V
C708	1-102-129-00	CERAMIC	0.01MF	10%	50V
C709	1-102-129-00	CERAMIC	0.01MF	10%	50V
C710	1-126-336-11	ELECT	220MF	20%	16V
C711	1-102-157-00	CERAMIC	560PF	10%	500V
C712	1-102-157-00	CERAMIC	560PF	10%	500V
C713	1-102-157-00	CERAMIC	560PF	10%	500V
C714	1-162-116-00	CERAMIC	680PF	10%	2KV
C715	1-162-116-00	CERAMIC	680PF	10%	2KV
C716	1-126-326-51	ELECT	10MF	20%	250V
C717	1-126-101-11	ELECT	100MF	20%	16V
C718	1-124-925-11	ELECT	2.2MF	20%	50V
C719	1-124-907-11	ELECT	10MF	20%	50V
C720	1-162-117-00	CERAMIC	100PF	10%	500V

<CONNECTOR>

CN701	*1-564-508-11	PLUG, CONNECTOR 5P
CN702	*1-573-964-11	PIN, CONNECTOR (PC BOARD) 6P
CN703	*1-564-507-11	PLUG, CONNECTOR 4P

<DIODE>

D701	8-719-911-19	DIODE 1SS119-25
D702	8-719-901-83	DIODE 1SS83
D703	8-719-901-83	DIODE 1SS83
D704	8-719-901-83	DIODE 1SS83
D705	8-719-121-24	DIODE RD9.1ESL
D706	8-719-908-03	DIODE GP08D
D707	8-719-911-19	DIODE 1SS119-25
D708	8-719-911-19	DIODE 1SS119-25
D709	8-719-911-19	DIODE 1SS119-25
D710	8-719-911-19	DIODE 1SS119-25

<IC>

IC701	8-759-073-90	IC TDA6111Q
IC702	8-759-073-90	IC TDA6111Q
IC703	8-759-073-90	IC TDA6111Q

<SOCKET>

J701	⚠1-540-223-11	SOCKET, PICTURE TUBE	

<COIL>

L701	1-410-466-41	INDUCTOR	4.7UH
L702	1-410-466-41	INDUCTOR	4.7UH
L703	1-410-466-41	INDUCTOR	4.7UH
L704	1-410-671-31	INDUCTOR	47UH

<TRANSISTOR>

Q701	8-729-119-76	TRANSISTOR 2SA1175-HFE
Q702	8-729-900-89	TRANSISTOR DTC144ES
Q703	8-729-900-89	TRANSISTOR DTC144ES
Q704	8-729-119-78	TRANSISTOR 2SC2785-HFE
Q705	8-729-119-78	TRANSISTOR 2SC2785-HFE
Q706	8-729-823-81	TRANSISTOR 2SC4632LS-CB7

<RESISTOR>

R701	1-249-415-11	CARBON	680	5%	1/4W	
R702	1-249-415-11	CARBON	680	5%	1/4W	
R703	1-249-415-11	CARBON	680	5%	1/4W	
R704	1-249-417-11	CARBON	1K	5%	1/4W	
R705	1-249-417-11	CARBON	1K	5%	1/4W	
R706	1-249-417-11	CARBON	1K	5%	1/4W	
R707	1-215-926-00	METAL OXIDE	33K	5%	3W	F
R708	1-215-926-00	METAL OXIDE	33K	5%	3W	F
R709	1-215-926-00	METAL OXIDE	33K	5%	3W	F
R710	1-249-417-11	CARBON	1K	5%	1/4W	
R711	1-249-417-11	CARBON	1K	5%	1/4W	
R712	1-249-417-11	CARBON	1K	5%	1/4W	
R713	1-249-408-11	CARBON	180	5%	1/4W	
R714	1-249-408-11	CARBON	180	5%	1/4W	
R715	1-249-408-11	CARBON	180	5%	1/4W	
R716	1-202-557-00	SOLID	220	20%	1/2W	
R717	1-202-557-00	SOLID	220	20%	1/2W	
R718	1-202-557-00	SOLID	220	20%	1/2W	
R719	1-249-424-11	CARBON	3.9K	5%	1/4W	
R720	1-249-424-11	CARBON	3.9K	5%	1/4W	
R721	1-249-424-11	CARBON	3.9K	5%	1/4W	
R722	1-249-430-11	CARBON	12K	5%	1/4W	
R723	1-249-425-11	CARBON	4.7K	5%	1/4W	
R724	1-249-435-11	CARBON	33K	5%	1/4W	
R725	1-249-429-11	CARBON	10K	5%	1/4W	
R726	1-249-429-11	CARBON	10K	5%	1/4W	
R727	1-247-807-31	CARBON	100	5%	1/4W	
R728	1-249-417-11	CARBON	1K	5%	1/4W	
R729	1-249-417-11	CARBON	1K	5%	1/4W	
R730	1-249-427-11	CARBON	6.8K	5%	1/4W	
R731	1-249-426-11	CARBON	5.6K	5%	1/4W	
R732	1-249-423-11	CARBON	3.3K	5%	1/4W	
R733	1-249-429-11	CARBON	10K	5%	1/4W	
R734	1-202-722-00	SOLID	1.8M	20%	1/2W	
R735	1-202-722-00	SOLID	1.8M	20%	1/2W	
R748	1-202-842-11	SOLID	220K	20%	1/2W	
R749	1-216-373-11	METAL OXIDE	2.2	5%	2W	F
R750	1-202-549-00	SOLID	100	20%	1/2W	
R751	1-202-838-00	SOLID	100K	20%	1/2W	
R752	1-202-846-00	SOLID	470K	20%	1/2W	
R753	1-202-846-00	SOLID	470K	20%	1/2W	
R754	1-202-549-00	SOLID	100	20%	1/2W	
R755	1-202-842-11	SOLID	220K	20%	1/2W	

REF.NO.	PART NO.	DESCRIPTION				REMARK
R756	1-202-818-00	SOLID	1K	20%	1/2W	
R757	1-202-838-00	SOLID	100K	20%	1/2W	
R758	1-202-549-00	SOLID	100	20%	1/2W	
		<VARIABLE RESISTOR>				
RV701	1-241-714-11	RES, ADJ, METAL FILM 110M				
RV702	1-238-019-11	RES, ADJ, CARBON 47K				
		<TAB>				
TB701	1-695-915-11	TAB (CONTACT)				
TB702	1-695-915-11	TAB (CONTACT)				
**********						
	*A-1342-267-A	V BOARD, COMPLETE				
		**********				
		<CONNECTOR>				
CN901	*1-564-512-11	PLUG, CONNECTOR 9P				
**********						
	*A-1346-254-A	D BOARD, COMPLETE				
		**********				
	*1-560-436-00	HORIZONTAL PIN ASSY 3P				
	4-382-854-11	SCREW (M3X10), P, SW (+)				
		<CAPACITOR>				
C1701	1-124-126-00	ELECT	47MF	20%	16V	
C1704	1-136-153-00	FILM	0.01MF	5%	50V	
C1705	1-136-165-00	FILM	0.1MF	5%	50V	
C1707	1-107-884-11	ELECT	1000MF	20%	16V	
C1709	1-129-765-00	FILM	0.047MF	10%	200V	
C1710	1-136-177-00	FILM	1MF	5%	50V	
C1711	1-106-367-00	MYLAR	0.01MF	10%	100V	
C1712	1-126-163-11	ELECT	4.7MF	20%	50V	
C1713	1-106-371-00	MYLAR	0.015MF	10%	100V	
C1714	1-126-964-11	ELECT	10MF	20%	50V	
C1715	1-126-964-11	ELECT	10MF	20%	50V	
C1716	1-124-234-00	ELECT	22MF	20%	16V	
C1717	1-124-927-11	ELECT	4.7MF	20%	50V	
C1718	1-124-126-00	ELECT	47MF	20%	16V	
C1719	1-136-165-00	FILM	0.1MF	5%	50V	
C1720	1-126-935-11	ELECT	470MF	20%	16V	
C1722	1-126-375-11	ELECT	100MF	20%	16V	
C1723	1-126-964-11	ELECT	10MF	20%	50V	
C1724	1-102-129-00	CERAMIC	0.01MF	10%	50V	
C1725	1-136-153-00	FILM	0.01MF	5%	50V	
C1726	1-136-157-00	FILM	0.022MF	5%	50V	
C1734	1-126-964-11	ELECT	10MF	20%	50V	
C1735	1-126-964-11	ELECT	10MF	20%	50V	
C1736	1-126-772-11	ELECT	1MF	20%	160V	
C1737	1-136-153-00	FILM	0.01MF	5%	50V	
C1738	1-126-964-11	ELECT	10MF	20%	50V	
C1739	1-102-129-00	CERAMIC	0.01MF	10%	50V	
C1740	1-130-202-00	FILM	0.022MF	10%	400V	
C1741	1-129-702-00	FILM	0.001MF	10%	630V	
C1742	1-126-952-11	ELECT	1000MF	20%	16V	
C1743	1-130-483-00	MYLAR	0.01MF	5%	50V	

REF.NO.	PART NO.	DESCRIPTION	REMARK
		<CONNECTOR>	
CN1701	*1-573-299-11	CONNECTOR, BOARD TO BOARD 10P	
CN1702	*1-573-299-11	CONNECTOR, BOARD TO BOARD 10P	
CN1703	1-564-524-11	PLUG, CONNECTOR 9P	
		<DIODE>	
D1705	8-719-987-87	DIODE ERA85-009	
D1706	8-719-980-78	DIODE ERA83-006	
D1707	8-719-980-78	DIODE ERA83-006	
D1708	8-719-911-19	DIODE 1SS119-25	
D1709	8-719-911-19	DIODE 1SS119-25	
D1710	8-719-911-19	DIODE 1SS119-25	
D1711	8-719-302-43	DIODE EL1Z	
D1712	8-719-911-19	DIODE 1SS119-25	
D1716	8-719-911-19	DIODE 1SS119-25	
D1717	8-719-110-13	DIODE RD9.1ESL2	
D1731	8-719-911-19	DIODE 1SS119-25	
D1732	8-719-911-19	DIODE 1SS119-25	
D1733	8-719-302-43	DIODE EL1Z	
D1736	8-719-980-78	DIODE ERA83-006	
D1738	8-719-911-19	DIODE 1SS119-25	
		<IC>	
IC1701	8-759-168-20	IC TA78L09S	
IC1702	8-752-052-88	IC CXA1526P	
IC1703	8-759-135-80	IC UPC358C	
IC1704	8-759-135-80	IC UPC358C	
IC1731	8-759-135-80	IC UPC358C	
IC1733	8-759-103-93	IC UPC393C	
		<COIL>	
L1701	1-406-666-21	COIL, CHOKE 150UH	
L1702	1-406-986-11	COIL, CHOKE 3.3MMH	
L1703	1-410-093-11	INDUCTOR 33MMH	
L1732	1-406-986-11	COIL, CHOKE 3.3MMH	
		<TRANSISTOR>	
Q1702	8-729-119-76	TRANSISTOR 2SA1175-HFE	
Q1703	8-729-119-78	TRANSISTOR 2SC2785-HFE	
Q1704	8-729-119-78	TRANSISTOR 2SC2785-HFE	
Q1705	8-729-024-95	TRANSISTOR 2SB1565EF	
Q1706	8-729-119-78	TRANSISTOR 2SC2785-HFE	
Q1707	8-729-024-95	TRANSISTOR 2SB1565EF	
Q1708	8-729-119-76	TRANSISTOR 2SA1175-HFE	
Q1709	8-729-019-01	TRANSISTOR 2SD2394-EF	
Q1710	8-729-140-96	TRANSISTOR 2SD774-34	
Q1711	8-729-119-78	TRANSISTOR 2SC2785-HFE	
Q1712	8-729-119-78	TRANSISTOR 2SC2785-HFE	
Q1713	8-729-140-96	TRANSISTOR 2SD774-34	
Q1736	8-729-119-80	TRANSISTOR 2SC2688-LK	
Q1737	8-729-119-80	TRANSISTOR 2SC2688-LK	
Q1738	8-729-140-97	TRANSISTOR 2SB734-34	
Q1739	8-729-119-76	TRANSISTOR 2SA1175-HFE	
Q1740	8-729-119-78	TRANSISTOR 2SC2785-HFE	
Q1743	8-729-921-43	TRANSISTOR IRF840	
Q1744	8-729-119-76	TRANSISTOR 2SA1175-HFE	
		<RESISTOR>	
R1575	1-249-423-11	CARBON 3.3K 5% 1/4W	

D DA

REF.NO.	PART NO.	DESCRIPTION				REMARK
R1701	1-249-409-11	CARBON	220	5%	1/4W	
R1702	1-249-409-11	CARBON	220	5%	1/4W	
R1704	1-247-891-00	CARBON	330K	5%	1/4W	
R1708	1-215-463-00	METAL	56K	1%	1/4W	
R1709	1-249-423-11	CARBON	3.3K	5%	1/4W	
R1710	1-249-413-11	CARBON	470	5%	1/4W	
R1711	1-249-434-11	CARBON	27K	5%	1/4W	
R1712	1-249-440-11	CARBON	82K	5%	1/4W	
R1713	1-249-423-11	CARBON	3.3K	5%	1/4W	
R1714	1-249-429-11	CARBON	10K	5%	1/4W	
R1715	1-249-427-11	CARBON	6.8K	5%	1/4W	
R1716	1-249-417-11	CARBON	1K	5%	1/4W	
R1717	1-249-422-11	CARBON	2.7K	5%	1/4W	
R1718	1-249-421-11	CARBON	2.2K	5%	1/4W	
R1720	1-249-423-11	CARBON	3.3K	5%	1/4W	
R1721	1-216-377-11	METAL OXIDE	4.7	5%	2W	F
R1722	1-249-423-11	CARBON	3.3K	5%	1/4W	
R1724	1-249-423-11	CARBON	3.3K	5%	1/4W	
R1725	1-215-882-00	METAL OXIDE	22	5%	2W	F
R1728	1-249-441-11	CARBON	100K	5%	1/4W	
R1729	1-249-414-11	CARBON	560	5%	1/4W	
R1731	1-249-426-11	CARBON	5.6K	5%	1/4W	
R1733	1-249-423-11	CARBON	3.3K	5%	1/4W	
R1734	1-247-863-91	CARBON	22K	5%	1/4W	
R1735	1-249-393-11	CARBON	10	5%	1/4W	
R1736	1-249-435-11	CARBON	33K	5%	1/4W	
R1737	1-249-435-11	CARBON	33K	5%	1/4W	
R1738	1-215-857-11	METAL OXIDE	10	5%	1W	F
R1739	1-249-410-11	CARBON	270	5%	1/4W	
R1740	1-249-429-11	CARBON	10K	5%	1/4W	
R1741	1-249-437-11	CARBON	47K	5%	1/4W	
R1742	1-249-429-11	CARBON	10K	5%	1/4W	
R1743	1-249-421-11	CARBON	2.2K	5%	1/4W	
R1744	1-249-421-11	CARBON	2.2K	5%	1/4W	
R1745	1-249-417-11	CARBON	1K	5%	1/4W	
R1746	1-249-393-11	CARBON	10	5%	1/4W	
R1750	1-249-425-11	CARBON	4.7K	5%	1/4W	
R1751	1-249-439-11	CARBON	68K	5%	1/4W	
R1752	1-249-437-11	CARBON	47K	5%	1/4W	
R1753	1-249-437-11	CARBON	47K	5%	1/4W	
R1754	1-249-437-11	CARBON	47K	5%	1/4W	
R1756	1-249-430-11	CARBON	12K	5%	1/4W	
R1757	1-249-421-11	CARBON	2.2K	5%	1/4W	
R1758	1-249-429-11	CARBON	10K	5%	1/4W	
R1759	1-247-895-00	CARBON	470K	5%	1/4W	
R1760	1-249-435-11	CARBON	33K	5%	1/4W	
R1761	1-249-437-11	CARBON	47K	5%	1/4W	
R1762	1-249-429-11	CARBON	10K	5%	1/4W	
R1763	1-249-430-11	CARBON	12K	5%	1/4W	
R1764	1-249-435-11	CARBON	33K	5%	1/4W	
R1765	1-247-863-91	CARBON	22K	5%	1/4W	
R1766	1-247-885-00	CARBON	180K	5%	1/4W	
R1767	1-249-417-11	CARBON	1K	5%	1/4W	
R1770	1-215-439-00	METAL	5.6K	1%	1/4W	
R1771	1-215-449-00	METAL	15K	1%	1/4W	
R1772	1-215-433-00	METAL	3.3K	1%	1/4W	
R1773	1-247-903-00	CARBON	1M	5%	1/4W	
R1774	1-249-429-11	CARBON	10K	5%	1/4W	
R1775	1-249-431-11	CARBON	15K	5%	1/4W	
R1777	1-249-439-11	CARBON	68K	5%	1/4W	
R1779	1-247-863-91	CARBON	22K	5%	1/4W	
R1780	1-249-418-11	CARBON	1.2K	5%	1/4W	F
R1781	1-215-875-11	METAL OXIDE	10K	5%	1W	F
R1782	1-216-428-00	METAL OXIDE	180	5%	1W	F
R1784	1-215-445-00	METAL	10K	1%	1/4W	
R1787	1-215-455-00	METAL	27K	1%	1/4W	
R1788	1-249-423-11	CARBON	3.3K	5%	1/4W	
R1789	1-249-413-11	CARBON	470	5%	1/4W	
R1790	1-249-415-11	CARBON	680	5%	1/4W	
R1791	1-249-425-11	CARBON	4.7K	5%	1/4W	
R1792	1-249-415-11	CARBON	680	5%	1/4W	
R1793	1-249-440-11	CARBON	82K	5%	1/4W	
R1794	1-249-427-11	CARBON	6.8K	5%	1/4W	
R1797	1-249-417-11	CARBON	1K	5%	1/4W	
R1798	1-249-404-00	CARBON	82	5%	1/4W	

<VARIABLE RESISTOR>

RV1701	1-241-763-11	RES, ADJ, CARBON 4.7K	

****

	*A-1346-277-A	DA BOARD, COMPLETE	
		**********	
	*3-738-015-01	COVER, (DIA. 6) CARBON VR	

<CAPACITOR>

C2502	1-106-343-00	MYLAR	0.001MF	10%	100V
C2504	1-163-025-11	CERAMIC CHIP	0.001MF		50V
C2505	1-136-167-00	FILM	0.15MF	5%	50V
C2506	1-163-025-11	CERAMIC CHIP	0.001MF		50V
C2507	1-136-165-00	FILM	0.1MF	5%	50V
C2508	1-130-469-00	MYLAR	680PF	5%	50V
C2509	1-124-903-11	ELECT	1MF	20%	50V
C2510	1-126-964-11	ELECT	10MF	20%	50V
C2511	1-124-768-11	ELECT	4.7MF	20%	50V
C2512	1-124-768-11	ELECT	4.7MF	20%	50V
C2513	1-124-768-11	ELECT	4.7MF	20%	50V
C2530	1-126-964-11	ELECT	10MF	20%	50V
C2531	1-104-665-11	ELECT	100MF	20%	25V
C2535	1-136-161-00	FILM	0.047MF	5%	50V
C2536	1-124-927-11	ELECT	4.7MF	20%	50V
C2541	1-164-232-11	CERAMIC CHIP	0.01MF	10%	50V
C2542	1-163-133-00	CERAMIC CHIP	470PF	5%	50V
C2543	1-136-157-00	FILM	0.022MF	5%	50V
C2545	1-126-964-11	ELECT	10MF	20%	50V
C2546	1-136-157-00	FILM	0.022MF	5%	50V
C2547	1-163-133-00	CERAMIC CHIP	470PF	5%	50V
C2548	1-124-902-00	ELECT	0.47MF	20%	50V
C2549	1-163-263-11	CERAMIC CHIP	330PF	5%	50V
C2552	1-126-964-11	ELECT	10MF	20%	50V
C2554	1-136-161-00	FILM	0.047MF	5%	50V
C2556	1-126-933-11	ELECT	100MF	20%	16V
C2557	1-130-479-00	MYLAR	0.0047MF	5%	50V
C2558	1-130-483-00	MYLAR	0.01MF	5%	50V
C2559	1-124-903-11	ELECT	1MF	20%	50V
C2560	1-130-483-00	MYLAR	0.01MF	5%	50V
C2561	1-126-964-11	ELECT	10MF	20%	50V
C2562	1-126-925-11	ELECT	470MF	20%	10V
C2563	1-126-934-11	ELECT	220MF	20%	16V
C2564	1-130-479-00	MYLAR	0.0047MF	5%	50V
C2565	1-130-481-00	MYLAR	0.0068MF	5%	50V
C2567	1-126-925-11	ELECT	470MF	20%	10V
C2591	1-163-125-00	CERAMIC CHIP	220PF	5%	50V
C2592	1-126-933-11	ELECT	100MF	20%	16V

The components identified by shading and mark ⚠ are critical for safety.
Replace only with part number specified.

Les composants identifies par une trame et une marque ⚠ sont critiques pour la securite.
Ne les remplacer que par une piece portant le numero specifie.

DA

REF.NO.	PART NO.	DESCRIPTION				REMARK
		<CONNECTOR>				
CN2501	1-573-300-11	CONNECTOR, BOARD TO BOARD 18P				
CN2502*	1-564-521-11	PLUG, CONNECTOR 6P				
CN2503*	1-564-519-11	PLUG, CONNECTOR 4P				
		<DIODE>				
D2501	8-719-404-46	DIODE MA110				
D2502	8-719-404-46	DIODE MA110				
D2505	8-719-110-72	DIODE RD30ESB2				
D2507	8-719-404-46	DIODE MA110				
D2510	8-719-110-63	DIODE RD24ESB3				
D2511	8-719-404-46	DIODE MA110				
D2512	8-719-404-46	DIODE MA110				
D2513	8-719-404-46	DIODE MA110				
D2514	8-719-404-46	DIODE MA110				
D2515	8-719-404-46	DIODE MA110				
D2516	8-719-901-83	DIODE 1SS83				
D2517	8-719-110-03	DIODE RD7.5ESB2				
D2519	8-719-404-46	DIODE MA110				
D2526	8-719-109-93	DIODE RD6.2ESB2				
D2553	8-719-404-46	DIODE MA110				
D2554	8-719-109-54	DIODE RD2.2ESB2				
D2555	8-719-404-46	DIODE MA110				
		<IC>				
IC2502	8-759-981-65	IC LM2903M				
IC2503	8-759-981-65	IC LM2903M				
IC2504	1-810-321-12	PROTECTOR MODULE, HV				
IC2505	8-759-970-89	IC BA10358F				
IC2506	8-759-970-89	IC BA10358F				
IC2507	8-759-981-65	IC LM2903M				
IC2508	8-759-981-65	IC LM2903M				
		<FUSE>				
PS2501⚠	1-532-766-21	FUSE, MICRO (SECONDARY)				
		<TRANSISTOR>				
Q2510	8-729-216-22	TRANSISTOR 2SA1162-G				
Q2511	8-729-216-22	TRANSISTOR 2SA1162-G				
Q2512	8-729-120-28	TRANSISTOR 2SC1623-L5L6				
Q2513	8-729-120-28	TRANSISTOR 2SC1623-L5L6				
Q2514	8-729-119-78	TRANSISTOR 2SC2785-HFE				
Q2515	8-729-120-28	TRANSISTOR 2SC1623-L5L6				
Q2517	8-729-120-28	TRANSISTOR 2SC1623-L5L6				
Q2518	8-729-216-22	TRANSISTOR 2SA1162-G				
Q2519	8-729-119-80	TRANSISTOR 2SC2688-LK				
Q2520	8-729-122-13	TRANSISTOR 2SA1221-K				
Q2523	8-729-216-22	TRANSISTOR 2SA1162-G				
Q2530	8-729-216-22	TRANSISTOR 2SA1162-G				
Q2531	8-729-216-22	TRANSISTOR 2SA1162-G				
		<RESISTOR>				
R2501	1-216-049-00	METAL GLAZE	1K	5%	1/10W	
R2503	1-216-065-00	METAL GLAZE	4.7K	5%	1/10W	
R2505	1-216-073-00	METAL GLAZE	10K	5%	1/10W	
R2506	1-216-073-00	METAL GLAZE	10K	5%	1/10W	
R2507	1-216-465-11	METAL OXIDE	27K	5%	2W	F
R2508	1-216-662-11	METAL CHIP	3K	0.50%	1/10W	
R2509	1-216-699-11	METAL CHIP	100K	0.50%	1/10W	
R2510	1-216-073-00	METAL GLAZE	10K	5%	1/10W	
R2511	1-216-109-00	METAL GLAZE	330K	5%	1/10W	
R2512	1-218-770-11	METAL CHIP	560K	0.50%	1/10W	
R2513	1-216-675-11	METAL CHIP	10K	0.50%	1/10W	
R2514	1-216-057-00	METAL GLAZE	2.2K	5%	1/10W	
R2515	1-216-057-00	METAL GLAZE	2.2K	5%	1/10W	
R2519	1-216-073-00	METAL GLAZE	10K	5%	1/10W	
R2520	1-216-691-11	METAL CHIP	47K	0.50%	1/10W	
R2521	1-216-117-00	METAL GLAZE	680K	5%	1/10W	
R2522	1-216-093-00	METAL GLAZE	68K	5%	1/10W	
R2523	1-216-121-00	METAL GLAZE	1M	5%	1/10W	
R2524	1-216-061-00	METAL GLAZE	3.3K	5%	1/10W	
R2527	1-216-662-11	METAL CHIP	3K	0.50%	1/10W	
R2528	1-216-661-11	METAL CHIP	2.7K	0.50%	1/10W	
R2529	1-216-661-11	METAL CHIP	2.7K	0.50%	1/10W	
R2530	1-216-661-11	METAL CHIP	2.7K	0.50%	1/10W	
R2531	1-216-464-11	METAL OXIDE	18K	5%	2W	F
R2532	1-216-093-00	METAL GLAZE	68K	5%	1/10W	
R2533	1-216-464-11	METAL OXIDE	18K	5%	2W	F
R2534	1-216-089-00	METAL GLAZE	47K	5%	1/10W	
R2535	1-216-101-00	METAL GLAZE	150K	5%	1/10W	
R2536	1-216-675-11	METAL CHIP	10K	0.50%	1/10W	
R2537	1-218-768-11	METAL CHIP	470K	0.50%	1/10W	
R2538	1-216-069-00	METAL GLAZE	6.8K	5%	1/10W	
R2539	1-216-065-00	METAL GLAZE	4.7K	5%	1/10W	
R2540	1-216-073-00	METAL GLAZE	10K	5%	1/10W	
R2546	1-216-689-11	METAL CHIP	39K	0.50%	1/10W	
R2547	1-216-691-11	METAL CHIP	47K	0.50%	1/10W	
R2548	1-208-803-11	METAL CHIP	7.5K	0.50%	1/10W	
R2549	1-216-697-91	METAL CHIP	82K	0.50%	1/10W	
R2550	1-216-671-11	METAL CHIP	6.8K	0.50%	1/10W	
R2551	1-216-671-11	METAL CHIP	6.8K	0.50%	1/10W	
R2552	1-216-678-11	METAL CHIP	13K	0.50%	1/10W	
R2553	1-216-121-00	METAL GLAZE	1M	5%	1/10W	
R2555	1-216-097-00	METAL GLAZE	100K	5%	1/10W	
R2556	1-216-061-00	METAL GLAZE	3.3K	5%	1/10W	
R2557	1-216-085-00	METAL GLAZE	33K	5%	1/10W	
R2558	1-216-081-00	METAL GLAZE	22K	5%	1/10W	
R2559	1-216-073-00	METAL GLAZE	10K	5%	1/10W	
R2560	1-216-073-00	METAL GLAZE	10K	5%	1/10W	
R2561	1-216-089-00	METAL GLAZE	47K	5%	1/10W	
R2562	1-216-089-00	METAL GLAZE	47K	5%	1/10W	
R2563	1-216-097-00	METAL GLAZE	100K	5%	1/10W	
R2564	1-216-037-00	METAL GLAZE	330	5%	1/10W	
R2565	1-208-810-11	METAL CHIP	15K	0.50%	1/10W	
R2566	1-249-410-11	CARBON	270	5%	1/4W	
R2567	1-216-667-11	METAL CHIP	4.7K	0.50%	1/10W	
R2568	1-249-411-11	CARBON	330	5%	1/4W	
R2570	1-216-033-00	METAL GLAZE	220	5%	1/10W	
R2571	1-216-073-00	METAL GLAZE	10K	5%	1/10W	
R2572	1-216-675-11	METAL CHIP	10K	0.50%	1/10W	
R2573	1-208-810-11	METAL CHIP	15K	0.50%	1/10W	
R2574	1-216-675-11	METAL CHIP	10K	0.50%	1/10W	
R2575	1-218-766-11	METAL CHIP	390K	0.50%	1/10W	
R2576	1-216-675-11	METAL CHIP	10K	0.50%	1/10W	
R2577	1-216-089-00	METAL GLAZE	47K	5%	1/10W	
R2579	1-216-037-00	METAL GLAZE	330	5%	1/10W	
R2580	1-218-764-11	METAL CHIP	330K	0.50%	1/10W	
R2582	1-218-776-11	METAL CHIP	1M	0.50%	1/10W	
R2583	1-216-697-91	METAL CHIP	82K	0.50%	1/10W	
R2584	1-216-097-00	METAL GLAZE	100K	5%	1/10W	
R2585	1-216-097-00	METAL GLAZE	100K	5%	1/10W	
R2586	1-247-883-00	CARBON	150K	5%	1/4W	

DA **DS** **VC**

Les composants identifies par une trame et une marque ⚠ sont critiques pour la securite. Ne les remplacer que par une piece portant le numero specifie.

The components identified by shading and mark ⚠ are critical for safety. Replace only with part number specified.

REF.NO.	PART NO.	DESCRIPTION				REMARK
R2587	1-216-069-00	METAL GLAZE	6.8K	5%	1/10W	
R2588	1-216-675-11	METAL CHIP	10K	0.50%	1/10W	
R2589	1-216-675-11	METAL CHIP	10K	0.50%	1/10W	
R2591	1-216-073-00	METAL GLAZE	10K	5%	1/10W	
R2595	1-216-089-00	METAL GLAZE	47K	5%	1/10W	
R2596	1-216-121-00	METAL GLAZE	1M	5%	1/10W	

<VARIABLE RESISTOR>

⊠RV2501	A1-228-994-00	RES, ADJ, METAL GLAZE 10K	

****

	*A-1346-301-A	DS BOARD, COMPLETE	
		**********	

<CAPACITOR>

C1601	1-102-973-00	CERAMIC	100PF	5%	50V
C1602	1-102-110-00	CERAMIC	220PF	10%	50V
C1603	1-130-477-00	MYLAR	0.0033MF	5%	50V
C1604	1-124-903-11	ELECT	1MF	20%	50V
C1605	1-124-903-11	ELECT	1MF	20%	50V
C1606	1-136-153-00	FILM	0.01MF	5%	50V
C1607	1-124-903-11	ELECT	1MF	20%	50V
C1608	1-137-366-11	FILM	0.0022MF	5%	50V
C1609	1-126-934-11	ELECT	220MF	20%	16V
C1610	1-137-399-11	FILM	0.1MF	5%	50V
C1611	1-130-481-00	FILM	0.0068MF	5%	50V
C1612	1-124-927-11	ELECT	4.7MF	20%	50V
C1613	1-137-364-11	FILM	0.001MF	5%	50V
C1614	1-126-964-11	ELECT	10MF	20%	50V
C1616	1-126-967-11	ELECT	47MF	20%	50V
C1617	1-126-934-11	ELECT	220MF	20%	16V
C1618	1-137-366-11	FILM	0.0022MF	5%	50V
C1621	1-102-110-00	CERAMIC	220PF	10%	50V
C1624	1-130-489-00	FILM	0.033MF	5%	50V
C1626	1-130-467-00	MYLAR	470PF	5%	50V
C1627	1-130-489-00	FILM	0.033MF	5%	50V
C1628	1-136-165-00	FILM	0.1MF	5%	50V
C1630	1-137-399-11	FILM	0.1MF	5%	50V
C1631	1-102-106-00	CERAMIC	100PF	10%	50V
C1634	1-164-096-11	CERAMIC	0.01MF		50V

<CONNECTOR>

CN1601	1-573-300-11	CONNECTOR, BOARD TO BOARD 18P

<DIODE>

D1604	8-719-911-19	DIODE 1SS119-25
D1607	8-719-911-19	DIODE 1SS119-25
D1608	8-719-911-19	DIODE 1SS119-25
D1609	8-719-911-19	DIODE 1SS119-25

<IC>

IC1601	8-759-083-85	IC LA7856A
IC1602	8-759-135-80	IC UPC358C

<COIL>

L1601	1-410-482-31	INDUCTOR	100UH

REF.NO.	PART NO.	DESCRIPTION	REMARK
Q1601	8-729-119-76	TRANSISTOR 2SA1175-HFE	
Q1604	8-729-119-78	TRANSISTOR 2SC2785-HFE	
Q1612	8-729-119-78	TRANSISTOR 2SC2785-HFE	
Q1616	8-729-119-78	TRANSISTOR 2SC2785-HFE	
Q1617	8-729-119-76	TRANSISTOR 2SA1175-HFE	

<RESISTOR>

R1601	1-247-863-91	CARBON	22K	5%	1/4W
R1602	1-249-421-11	CARBON	2.2K	5%	1/4W
R1603	1-249-430-11	CARBON	12K	5%	1/4W
R1604	1-215-445-00	METAL	10K	1%	1/4W
R1605	1-215-421-00	METAL	1K	1%	1/4W
R1606	1-249-428-11	CARBON	8.2K	5%	1/4W
R1607	1-215-457-00	METAL	33K	1%	1/4W
R1608	1-215-445-00	METAL	10K	1%	1/4W
R1609	1-215-447-00	METAL	12K	1%	1/4W
R1610	1-249-423-11	CARBON	3.3K	5%	1/4W
R1611	1-249-421-11	CARBON	2.2K	5%	1/4W
R1612	1-215-467-00	METAL	82K	1%	1/4W
R1613	1-215-469-00	METAL	100K	1%	1/4W
R1614	1-249-430-11	CARBON	12K	5%	1/4W
R1615	1-249-431-11	CARBON	15K	5%	1/4W
R1616	1-247-807-31	CARBON	100	5%	1/4W
R1617	1-249-431-11	CARBON	15K	5%	1/4W
R1618	1-249-440-11	CARBON	82K	5%	1/4W
R1619	1-249-435-11	CARBON	33K	5%	1/4W
R1621	1-215-445-00	METAL	10K	1%	1/4W
R1623	1-249-435-11	CARBON	33K	5%	1/4W
R1624	1-249-421-11	CARBON	2.2K	5%	1/4W
R1625	1-249-426-11	CARBON	5.6K	5%	1/4W
R1626	1-215-457-00	METAL	33K	1%	1/4W
R1627	1-215-447-00	METAL	12K	1%	1/4W
R1628	1-215-477-00	METAL	220K	1%	1/4W
R1629	1-249-435-11	CARBON	33K	5%	1/4W
R1630	1-249-423-11	CARBON	3.3K	5%	1/4W
R1631	1-249-431-11	CARBON	15K	5%	1/4W
R1632	1-215-447-00	METAL	12K	1%	1/4W
R1637	1-249-429-11	CARBON	10K	5%	1/4W
R1642	1-259-884-11	CARBON	4.7M	5%	1/4W

<VARIABLE RESISTOR>

RV1601	1-241-766-11	RES, ADJ, CERMET 47K
RV1602	1-223-238-11	RES, ADJ, CARBON 4.7K

****

	*A-1347-096-A	VC BOARD, COMPLETE (PGM-2950)	
		**********	
	*A-1347-102-A	VC BOARD, COMPLETE (PGM-2950E)	
		**********	
	4-382-854-11	SCREW (M3X10), P, SW (+)	

<CAPACITOR>

C1801	1-104-664-11	ELECT	47MF	20%	25V
C1803	1-104-664-11	ELECT	47MF	20%	25V
C1804	1-104-664-11	ELECT	47MF	20%	25V
C1805	1-136-894-11	FILM	0.01MF	5%	50V
C1808	1-130-469-00	MYLAR	680PF	5%	50V
C1809	1-130-467-00	MYLAR	470PF	5%	50V

- The components identified by ⊠ in this manual have been carefully factory-selected for each set in order to satisfy regulations regarding X-ray radiation.
  Should replacement be required, replace only with the value originally used.

REF.NO.	PART NO.	DESCRIPTION				REMARK
C1810	1-136-171-00	FILM	0.33MF	5%	50V	
C1811	1-136-171-00	FILM	0.33MF	5%	50V	
C1812	1-126-320-11	ELECT	10MF	20%	16V	
C1813	1-136-104-00	FILM	0.16MF	5%	200V	
C1817	1-124-478-11	ELECT	100MF	20%	25V	
C1820	1-126-934-11	ELECT	220MF	20%	16V	
C1825	1-106-391-12	MYLAR	0.1MF	10%	200V	
C1850	1-136-153-00	FILM	0.01MF	5%	50V	
C1853	1-106-375-12	MYLAR	0.022MF	10%	100V	
		<CONNECTOR>				
CN1801*	1-573-299-11	CONNECTOR, BOARD TO BOARD 10P				
CN1802*	1-573-299-11	CONNECTOR, BOARD TO BOARD 10P				
CN1803	1-564-517-11	PLUG, CONNECTOR 2P				
CN1804*	1-508-768-00	PIN, CONNECTOR (5MM PITCH) 6P				
		<DIODE>				
D1801	8-719-911-19	DIODE 1SS119-25				
D1802	8-719-911-19	DIODE 1SS119-25				
D1806	8-719-911-19	DIODE 1SS119-25				
D1810	8-719-908-03	DIODE GP08D				
D1811	8-719-908-03	DIODE GP08D				
D1817	8-719-987-86	DIODE SB01-15CP				
D1818	8-719-987-86	DIODE SB01-15CP				
D1822	8-719-109-92	DIODE RD6.2ESB1				
D1823	8-719-109-89	DIODE RD5.6ESB2				
D1824	8-719-987-87	DIODE ERA85-009				
D1850	8-719-911-19	DIODE 1SS119-25				
D1851	8-719-911-19	DIODE 1SS119-25				
		<IC>				
IC1801	8-759-231-53	IC TA7805S				
IC1802	8-759-135-80	IC UPC358C				
IC1803	8-759-902-21	IC SN74LS221N				
IC1804	8-759-929-65	IC LM7912CT				
IC1850	8-759-135-80	IC UPC358C				
		<COIL>				
L1801	1-459-075-00	COIL,DYNAMIC CONVERSION CHOKE				
L1802	1-406-977-21	COIL, CHOKE 100UH				
		<IC LINK>				
PS1801	1-532-679-00	LINK, IC				
PS1802	1-532-637-00	LINK, IC				
		<TRANSISTOR>				
Q1801	8-729-119-78	TRANSISTOR 2SC2785-HFE				
Q1802	8-729-119-76	TRANSISTOR 2SA1175-HFE				
Q1803	8-729-119-78	TRANSISTOR 2SC2785-HFE				
Q1804	8-729-119-76	TRANSISTOR 2SA1175-HFE				
Q1805	8-729-119-78	TRANSISTOR 2SC2785-HFE				
Q1806	8-729-024-95	TRANSISTOR 2SB1565EF				
Q1807	8-729-024-95	TRANSISTOR 2SB1565EF				
Q1808	8-729-019-01	TRANSISTOR 2SD2394-EF				
Q1809	8-729-119-76	TRANSISTOR 2SA1175-HFE				
Q1810	8-729-119-78	TRANSISTOR 2SC2785-HFE				
Q1811	8-729-019-01	TRANSISTOR 2SD2394-EF				
Q1850	8-729-140-96	TRANSISTOR 2SD774-34				
Q1851	8-729-140-93	TRANSISTOR 2SB733-34				
Q1852	8-729-119-76	TRANSISTOR 2SA1175-HFE				
Q1853	8-729-119-78	TRANSISTOR 2SC2785-HFE				
		<RESISTOR>				
R1802	1-247-887-00	CARBON	220K	5%	1/4W	
R1803	1-215-465-00	METAL	68K	1%	1/4W	
R1806	1-216-397-11	METAL OXIDE	4.7	5%	3W	F
R1808	1-247-887-00	CARBON	220K	5%	1/4W	
R1811	1-249-429-11	CARBON	10K	5%	1/4W	
R1812	1-215-418-00	METAL	750	1%	1/4W	
R1813	1-215-466-00	METAL	75K	1%	1/4W	
R1814	1-249-427-11	CARBON	6.8K	5%	1/4W	
R1815	1-217-469-00	FUSIBLE	1	5%	1W	F
R1819	1-215-914-11	METAL OXIDE	330	5%	3W	F
R1822	1-249-409-11	CARBON	220	5%	1/4W	F
R1823	1-249-401-11	CARBON	47	5%	1/4W	F
R1825	1-215-455-00	METAL	27K	1%	1/4W	
R1828	1-247-807-31	CARBON	100	5%	1/4W	
R1830	1-217-469-00	FUSIBLE	1	5%	1W	F
R1831	1-247-807-31	CARBON	100	5%	1/4W	
R1832	1-215-885-00	METAL OXIDE	68	5%	2W	F
R1833	1-249-389-11	CARBON	4.7	5%	1/4W	F
R1834	1-216-400-11	METAL OXIDE	8.2	5%	3W	F
R1835	1-216-474-11	METAL OXIDE	82	5%	3W	F
R1836	1-216-472-00	METAL OXIDE	39	5%	3W	F
R1837	1-216-469-11	METAL OXIDE	12	5%	3W	F
R1846	1-249-429-11	CARBON	10K	5%	1/4W	
R1850	1-249-430-11	CARBON	12K	5%	1/4W	
R1851	1-247-863-91	CARBON	22K	5%	1/4W	
R1852	1-249-429-11	CARBON	10K	5%	1/4W	
R1853	1-249-429-11	CARBON	10K	5%	1/4W	
R1854	1-249-417-11	CARBON	1K	5%	1/4W	
R1855	1-249-429-11	CARBON	10K	5%	1/4W	
R1856	1-249-436-11	CARBON	39K	5%	1/4W	
R1857	1-249-427-11	CARBON	6.8K	5%	1/4W	
R1858	1-249-381-11	CARBON	1	5%	1/4W	F
R1859	1-215-862-11	METAL OXIDE	68	5%	1W	F
R1860	1-249-437-11	CARBON	47K	5%	1/4W	
R1861	1-249-429-11	CARBON	10K	5%	1/4W	
R1862	1-216-399-00	METAL OXIDE	6.8	5%	3W	F
R1863	1-215-910-00	METAL OXIDE	68	5%	3W	F
R1864	1-216-472-00	METAL OXIDE	39	5%	3W	F
R1865	1-215-905-11	METAL OXIDE	10	5%	3W	F
		<VARIABLE RESISTOR>				
RV1801	1-241-766-11	RES, ADJ, CERMET 47K				
		<TRANSFORMER>				
T1801	1-427-626-11	TRANSFORMER, FERRITE (VPOT)				

****

*A-1372-054-A H3 BOARD, COMPLETE

****

		<CAPACITOR>			
C871	1-126-924-11	ELECT	330MF	20%	10V
C872	1-163-035-00	CERAMIC CHIP	0.047MF		50V
C873	1-124-589-11	ELECT	47MF	20%	10V
C874	1-163-009-11	CERAMIC CHIP	0.001MF	10%	50V
C875	1-163-037-11	CERAMIC CHIP	0.022MF	10%	25V

H3 UA

REF.NO.	PART NO.	DESCRIPTION	REMARK
		<CONNECTOR>	
CN871	*1-564-518-11	PLUG, CONNECTOR 3P	
CN872	*1-564-511-11	PLUG, CONNECTOR 8P	
CN873	*1-564-513-11	PLUG, CONNECTOR 10P	
CN874	*1-564-509-11	PLUG, CONNECTOR 6P	
CN875	1-564-505-11	PLUG, CONNECTOR 2P	
CN877	*1-573-299-11	CONNECTOR, BOARD TO BOARD 10P	
		<DIODE>	
D871	8-719-404-46	DIODE MA110	
D872	8-719-404-46	DIODE MA110	
D873	8-719-404-46	DIODE MA110	
D874	8-719-404-46	DIODE MA110	
D875	8-719-404-46	DIODE MA110	
D876	8-719-404-46	DIODE MA110	
		<IC>	
IC871	8-759-285-18	IC MC68HC05P7BSC402191B	
		<COIL>	
L871	1-408-421-00	INDUCTOR 100UH	
L872	1-408-429-00	INDUCTOR 470UH	
		<TRANSISTOR>	
Q871	8-729-901-01	TRANSISTOR DTC144EK	
Q872	8-729-901-98	TRANSISTOR 2SA1036K-R	
Q873	8-729-901-98	TRANSISTOR 2SA1036K-R	
Q874	8-729-901-01	TRANSISTOR DTC144EK	
Q875	8-729-901-01	TRANSISTOR DTC144EK	
Q876	8-729-901-01	TRANSISTOR DTC144EK	
Q877	8-729-901-01	TRANSISTOR DTC144EK	
Q878	8-729-901-04	TRANSISTOR DTA114EK	
		<RESISTOR>	
R871	1-216-294-00	METAL GLAZE 10M 5% 1/8W	
R872	1-216-089-00	METAL GLAZE 47K 5% 1/10W	
R873	1-216-065-00	METAL GLAZE 4.7K 5% 1/10W	
R874	1-216-073-00	METAL GLAZE 10K 5% 1/10W	
R875	1-216-073-00	METAL GLAZE 10K 5% 1/10W	
R876	1-216-065-00	METAL GLAZE 4.7K 5% 1/10W	
R877	1-216-097-00	METAL GLAZE 100K 5% 1/10W	
R878	1-216-009-00	METAL GLAZE 22 5% 1/10W	
R879	1-216-005-00	METAL GLAZE 15 5% 1/10W	
R880	1-216-009-00	METAL GLAZE 22 5% 1/10W	
R881	1-216-009-00	METAL GLAZE 22 5% 1/10W	
R882	1-216-009-00	METAL GLAZE 22 5% 1/10W	
R883	1-216-009-00	METAL GLAZE 22 5% 1/10W	
R884	1-216-089-00	METAL GLAZE 47K 5% 1/10W	
R885	1-216-073-00	METAL GLAZE 10K 5% 1/10W	
R886	1-216-073-00	METAL GLAZE 10K 5% 1/10W	
R887	1-216-089-00	METAL GLAZE 47K 5% 1/10W	
R888	1-216-073-00	METAL GLAZE 10K 5% 1/10W	
R889	1-216-037-00	METAL GLAZE 330 5% 1/10W	
		<CRYSTAL>	
X871	1-577-082-11	VIBRATOR, CERAMIC	

****

	*A-1373-488-A	UA BOARD, COMPLETE	
		**********	
		<CAPACITOR>	
C171	1-126-933-11	ELECT 100MF 20% 10V	
C172	1-126-964-11	ELECT 10MF 20% 50V	
C173	1-163-031-11	CERAMIC CHIP 0.01MF 50V	
C174	1-126-964-11	ELECT 10MF 20% 50V	
C175	1-126-096-11	ELECT 10MF 20% 25V	
C176	1-126-096-11	ELECT 10MF 20% 25V	
C177	1-163-031-11	CERAMIC CHIP 0.01MF 50V	
C178	1-163-009-11	CERAMIC CHIP 0.001MF 10% 50V	
		<CONNECTOR>	
CN171	1-691-803-11	SOCKET, DIN	
CN172	*1-564-520-11	PLUG, CONNECTOR 5P	
CN173	*1-564-518-11	PLUG, CONNECTOR 3P	
CN175	*1-564-520-11	PLUG, CONNECTOR 5P	
		<DIODE>	
D171	8-719-110-17	DIODE RD10ESB2	
D172	8-719-110-17	DIODE RD10ESB2	
D173	8-719-911-19	DIODE 1SS119-25	
D174	8-719-404-46	DIODE MA110	
D175	8-719-404-46	DIODE MA110	
D176	8-719-404-46	DIODE MA110	
D177	8-719-404-46	DIODE MA110	
		<IC>	
IC171	8-759-065-85	IC MAX232N	
		<JACK>	
J171	1-563-760-11	JACK, MINIATUER (DIA. 3.5)	
J172	1-563-760-11	JACK, MINIATUER (DIA. 3.5)	
		<COIL>	
L171	1-422-613-11	COIL, AIR CORE	
L172	1-422-613-11	COIL, AIR CORE	
L173	1-422-613-11	COIL, AIR CORE	
L174	1-422-613-11	COIL, AIR CORE	
L175	1-422-613-11	COIL, AIR CORE	
L176	1-422-613-11	COIL, AIR CORE	
L177	1-422-613-11	COIL, AIR CORE	
L178	1-422-613-11	COIL, AIR CORE	
		<TRANSISTOR>	
Q171	8-729-901-01	TRANSISTOR DTC144EK	
Q172	8-729-901-06	TRANSISTOR DTA144EK	
		<RESISTOR>	
R171	1-216-025-00	METAL GLAZE 100 5% 1/10W	
R172	1-216-025-00	METAL GLAZE 100 5% 1/10W	
R173	1-216-057-00	METAL GLAZE 2.2K 5% 1/10W	

REF.NO.	PART NO.	DESCRIPTION			REMARK
R174	1-216-049-00	METAL GLAZE	1K	5% 1/10W	
R175	1-216-049-00	METAL GLAZE	1K	5% 1/10W	
R176	1-216-025-00	METAL GLAZE	100	5% 1/10W	
R177	1-216-049-00	METAL GLAZE	1K	5% 1/10W	
		<TERMINAL>			
TB171	1-537-187-11	TERMINAL, PUSH (4P)			
**********					
	*A-1373-500-A	UJ BOARD, COMPLETE			
		**********			
		<CAPACITOR>			
C106	1-126-157-11	ELECT	10MF	20% 16V	
C107	1-126-157-11	ELECT	10MF	20% 16V	
C108	1-126-157-11	ELECT	10MF	20% 16V	
C109	1-126-157-11	ELECT	10MF	20% 16V	
C110	1-126-157-11	ELECT	10MF	20% 16V	
C111	1-126-157-11	ELECT	10MF	20% 16V	
C112	1-126-157-11	ELECT	10MF	20% 16V	
C120	1-124-589-11	ELECT	47MF	20% 16V	
		<CONNECTOR>			
CN101	*1-566-641-11	CONNECTOR, HINGE (TAB) 18P			
CN102	*1-566-641-11	CONNECTOR, HINGE (TAB) 18P			
CN104	*1-564-521-11	PLUG, CONNECTOR 6P			
		<DIODE>			
D106	8-719-110-17	DIODE RD10ESB2			
D107	8-719-110-17	DIODE RD10ESB2			
D108	8-719-110-17	DIODE RD10ESB2			
D109	8-719-110-17	DIODE RD10ESB2			
D110	8-719-110-17	DIODE RD10ESB2			
D111	8-719-110-17	DIODE RD10ESB2			
D112	8-719-110-17	DIODE RD10ESB2			
		<JACK>			
J103	1-573-969-11	JACK BLOCK, PIN			
J104	1-573-969-11	JACK BLOCK, PIN			
J109	1-537-765-11	TERMINAL BOARD ASSY, I/O			
J114	1-537-790-11	TERMINAL BOARD ASSY, I/O			
		<TRANSISTOR>			
Q101	8-729-120-28	TRANSISTOR 2SC1623-L5L6			
Q102	8-729-120-28	TRANSISTOR 2SC1623-L5L6			
		<RESISTOR>			
R108	1-215-394-00	METAL	75	1% 1/4W	
R109	1-215-394-00	METAL	75	1% 1/4W	
R110	1-215-394-00	METAL	75	1% 1/4W	
R111	1-249-421-11	CARBON	2.2K	5% 1/4W	
R112	1-216-689-11	METAL GLAZE	39K	5% 1/10W	
R113	1-216-089-00	METAL GLAZE	47K	5% 1/10W	
R114	1-249-421-11	CARBON	2.2K	5% 1/4W	
R115	1-216-689-11	METAL GLAZE	39K	5% 1/10W	
R116	1-216-089-00	METAL GLAZE	47K	5% 1/10W	
R117	1-216-099-00	METAL GLAZE	120K	5% 1/10W	
R118	1-216-065-00	METAL GLAZE	4.7K	5% 1/10W	
R119	1-216-099-00	METAL GLAZE	120K	5% 1/10W	
R120	1-216-065-00	METAL GLAZE	4.7K	5% 1/10W	
R140	1-216-057-00	METAL GLAZE	2.2K	5% 1/10W	
R141	1-216-057-00	METAL GLAZE	2.2K	5% 1/10W	
R142	1-216-057-00	METAL GLAZE	2.2K	5% 1/10W	
R143	1-216-057-00	METAL GLAZE	2.2K	5% 1/10W	
R144	1-216-025-00	METAL GLAZE	100	5% 1/10W	
R145	1-216-025-00	METAL GLAZE	100	5% 1/10W	
R146	1-216-025-00	METAL GLAZE	100	5% 1/10W	
**********					
	*A-1373-513-A	UT BOARD, COMPLETE			
		**********			
		<CAPACITOR>			
C213	1-163-035-00	CERAMIC CHIP	0.047MF	50V	
C214	1-137-368-11	FILM	0.0047MF	5% 50V	
C215	1-136-165-00	FILM	0.1MF	5% 50V	
C216	1-137-368-11	FILM	0.0047MF	5% 50V	
C217	1-136-165-00	FILM	0.1MF	5% 50V	
C218	1-137-374-11	FILM	0.047MF	5% 50V	
C219	1-163-035-00	CERAMIC CHIP	0.047MF	50V	
C231	1-126-157-11	ELECT	10MF	20% 16V	
C232	1-126-934-11	ELECT	220MF	20% 16V	
C233	1-126-157-11	ELECT	10MF	20% 16V	
C234	1-126-157-11	ELECT	10MF	20% 16V	
C235	1-124-589-11	ELECT	47MF	20% 16V	
C236	1-126-301-11	ELECT	1MF	20% 50V	
C237	1-126-301-11	ELECT	1MF	20% 50V	
C238	1-126-933-11	ELECT	100MF	20% 16V	
C248	1-126-301-11	ELECT	1MF	20% 50V	
C250	1-126-157-11	ELECT	10MF	20% 16V	
C270	1-126-301-11	ELECT	1MF	20% 50V	
C271	1-126-163-11	ELECT	4.7MF	20% 50V	
		<CONNECTOR>			
CN201	*1-566-367-11	CONNECTOR, HINGE (RECEPTACLE)			
CN202	*1-566-367-11	CONNECTOR, HINGE (RECEPTACLE)			
CN204	1-573-300-11	CONNECTOR, BOARD TO BOARD 18P			
CN205	1-573-300-11	CONNECTOR, BOARD TO BOARD 18P			
CN207	*1-564-509-11	PLUG, CONNECTOR 6P			
		<IC>			
IC204	8-759-245-75	IC TA8184P			
IC205	8-752-058-68	IC CXA1315M			
		<CONDCTOR CHIP>			
JR207	1-216-295-91	CONDCTOR, CHIP			
JR208	1-216-295-91	CONDCTOR, CHIP			
JR209	1-216-295-91	CONDCTOR, CHIP			
		<COIL>			
L201	1-408-421-00	INDUCTOR	100UH		
		<RESISTOR>			
R205	1-216-033-00	METAL GLAZE	220	5% 1/10W	
R206	1-216-033-00	METAL GLAZE	220	5% 1/10W	
R210	1-216-033-00	METAL GLAZE	220	5% 1/10W	

Les composants identifies par une trame et une marque ⚠ sont critiques pour la securite. Ne les remplacer que par une piece portant le numero specifie.

The components identified by shading and mark ⚠ are critical for safety. Replace only with part number specified.

UT

REF.NO.	PART NO.	DESCRIPTION				REMARK
R211	1-216-081-00	METAL GLAZE	22K	5%	1/10W	
R212	1-216-081-00	METAL GLAZE	22K	5%	1/10W	
R213	1-216-081-00	METAL GLAZE	22K	5%	1/10W	
R214	1-216-081-00	METAL GLAZE	22K	5%	1/10W	
R215	1-216-089-00	METAL GLAZE	47K	5%	1/10W	
R217	1-216-081-00	METAL GLAZE	22K	5%	1/10W	
R218	1-216-089-00	METAL GLAZE	47K	5%	1/10W	
R219	1-216-295-91	CONDCTOR, CHIP				
R221	1-216-081-00	METAL GLAZE	22K	5%	1/10W	
R222	1-216-073-00	METAL GLAZE	10K	5%	1/10W	
R223	1-216-077-00	METAL GLAZE	15K	5%	1/10W	
R224	1-216-033-00	METAL GLAZE	220	5%	1/10W	
R225	1-216-033-00	METAL GLAZE	220	5%	1/10W	
R266	1-216-033-00	METAL GLAZE	220	5%	1/10W	
R286	1-216-091-00	METAL GLAZE	56K	5%	1/10W	
R288	1-216-069-00	METAL GLAZE	6.8K	5%	1/10W	
R289	1-216-073-00	METAL GLAZE	10K	5%	1/10W	
R290	1-216-081-00	METAL GLAZE	22K	5%	1/10W	
R291	1-216-077-00	METAL GLAZE	15K	5%	1/10W	
R292	1-216-065-00	METAL GLAZE	4.7K	5%	1/10W	
R293	1-216-081-00	METAL GLAZE	22K	5%	1/10W	

****

MISCELLANEOUS
****

⚠	1-426-573-22	COIL, DEGAUSSING (PGM-2950)
⚠	1-426-574-22	COIL, DEGAUSSING (PGM-2950)
⚠	1-402-715-21	COIL, DEMAGNETIZATION (PGM-2950E)
⚠	1-402-716-21	COIL, DEMAGNETIZATION (PGM-2950E)
⚠	1-452-616-13	NECK ASSY, PICTURE TUBE (NA323)
⚠	1-453-108-11	DC BLOCK, HIGH-VOLTAGE
	1-473-102-11	KEY BOARD UNIT
	1-543-982-11	CORE, FERRITE
	1-559-865-61	LEAD ASSY, HIGH-VOLTAGE
⚠	1-580-375-11	INLET 3P
	1-900-140-13	LEAD ASSY, FOCUS
	1-900-211-26	CONNECTOR ASSY
⚠	8-451-455-11	DEFLECTION YORK (Y29EXCM)
⚠	8-733-842-05	PICTURE TUBE (M68KUZ10X)

****

ACCESSORIES AND PACKING MATERIALS
****

	1-543-653-11	CORE ASSY, BEAD(DIVISION TYPE)
⚠	1-557-377-11	CORD, POWER(3 CORE) 10A/125V (PGM-2950)
⚠	1-590-151-11	CORD SET, POWER 10A/250V (PGM-2950)
	2-990-242-01	HOLDER (B), PLUG (PGM-2950)
	3-170-078-01	HOLDER (B), PLUG (PGM-2950E)
	3-798-380-11	MANUAL, INSTRUCTION
*	4-039-570-01	CUSHION (UPPER) (ASSY)
*	4-039-571-01	CUSHION (LOWER) (ASSY)
*	4-046-352-01	INDIVIDUAL CARTON (PGM-2950)
*	4-047-886-01	INDIVIDUAL CARTON (PGM-2950E)
*	4-388-954-01	BAG, PROTECTION

REMOTE COMMANDER
****

	1-467-798-11	REMOTE COMMANDER (RM-854)
		COVER, BATTERY (FOR RM-854)

9-978-473-01

Sony Corporation
Consumer A&V Products Company
TV & Display Products Div.

English
95BL02138-1
Printed in Japan
©1995.2

SERVICE MANUAL

MODEL	COMMANDER	DEST.	CHASSIS NO.
PGM-2950	RM-854	US/CND	SCC-F37C-A

MODEL	COMMANDER	DEST.	CHASSIS NO.
PGM-2950E	RM-854	AEP	SCC-H41A-A

CORRECTION-1

SUBJECT : H2 board on electrical pants list is missing.

File this correction with the Service manual.

TRINITRON® COLOR GRAPHIC MONITOR

SONY®

SECTION 6
ELECTRICAL PARTS LIST

REF.NO.	PART NO.	DESCRIPTION			REMARK
		H2 BOARD, COMPLETE			
		**********			
	9-908-867-01	HOLDER, LED			
	9-908-869-01	KEY TOP (KNOB, POWER SWITCH)			
	9-990-891-01	BOARD, REFLECTION A			
	9-990-892-01	BOARD, DISPENSION A			
		CAPACITOR			
C1111	1-126-157-11	ELECT	10MF	20% 16V	
		DIODE			
D1111	9-908-868-01	DIODE TLS263P			
D1112	8-719-802-17	DIODE TLY263P			
D1113	8-719-802-17	DIODE TLY263P			
D1114	8-719-802-17	DIODE TLY263P			
D1115	8-719-802-17	DIODE TLY263P			
D1116	8-719-802-17	DIODE TLY263P			
D1117	8-719-802-17	DIODE TLY263P			
D1118	8-719-802-17	DIODE TLY263P			
D1119	8-719-802-17	DIODE TLY263P			
D1130	8-719-802-17	DIODE TLY263P			
D1131	8-719-802-17	DIODE TLY263P			
D1132	8-719-802-17	DIODE TLY263P			
D1133	8-719-802-17	DIODE TLY263P			
D1134	8-719-911-19	DIODE 1SS119			
D1136	8-719-911-19	DIODE 1SS119			
D1137	8-719-911-19	DIODE 1SS119			
		IC			
IC1111	9-902-229-01	IC GP1U52R			
		RESISTOR			
R1111	1-247-807-11	CARBON	100	5% 1/4W	
R1112	1-247-807-11	CARBON	100	5% 1/4W	
R1113	1-247-879-11	CARBON	100K	5% 1/4W	
R1114	1-247-879-11	CARBON	100K	5% 1/4W	
R1115	1-247-879-11	CARBON	100K	5% 1/4W	
R1116	1-247-879-11	CARBON	100K	5% 1/4W	
R1117	1-249-408-11	CARBON	180	5% 1/4W	
R1118	1-249-403-11	CARBON	68	5% 1/4W	
R1119	1-249-408-11	CARBON	180	5% 1/4W	
R1122	1-249-408-11	CARBON	180	5% 1/4W	
		SWITCH			
S1111	1-554-303-21	SWITCH, KEY BOARD (VOL +)			
S1112	1-554-303-21	SWITCH, KEY BOARD (VOL –)			
S1113	1-554-303-21	SWITCH, KEY BOARD (RGB)			
S1119	1-554-303-21	SWITCH, KEY BOARD (MENU)			
S1120	1-554-303-21	SWITCH, KEY BOARD (SELECT +)			
S1121	1-554-303-21	SWITCH, KEY BOARD (SELECT –)			
S1122	1-554-303-21	SWITCH, KEY BOARD (ENTER)			
S1123	1-554-303-21	SWITCH, KEY BOARD (CONTROL)			
S1124	1-554-118-00	SWITCH, PUSH (1 KEY) (POWER)			

Sony Corporation
Image & Sound Communication Company

English
96EJ0513-1
Printed in Japan
© 1996. 5

9-978-473-91

ADJUSTMENT MANUAL

MODEL	COMMANDER	DEST.	CHASSIS NO.
PGM-2950	RM-854	US/CND	SCC-F37C-A

MODEL	COMMANDER	DEST.	CHASSIS NO.
PGM-2950E	RM-854	AEP	SCC-H41A-A

Note :

1. Service Manual for this model is separately published.

	Service Manual
Part No	9-978-473-01

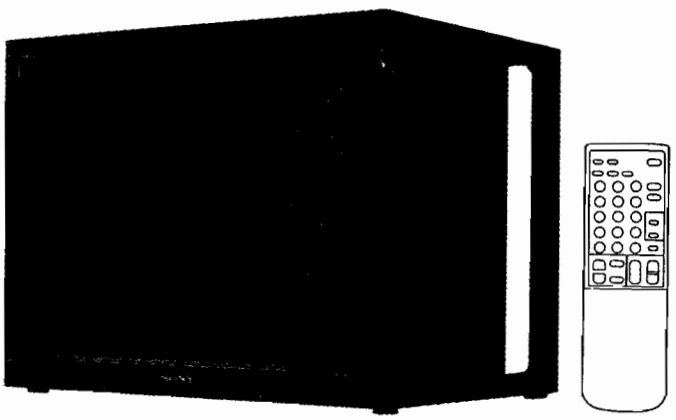

MICROFILM

TRINITRON® COLOR GRAPHIC MONITOR

SONY®

※ Please file according to model size.···

29

TABLE OF CONTENTS

Section	Title	Page
SET-UP ADJUSTMENTS		
	Beam Landing	3
	Convergence Adjustment	5
	Focus Adjustment	11
	Screen (G2) White Balance Adjustment	11
ELECTRIC ADJUSTMENT IN THE SERVICE MODE		
	Function of the Commander in the Service Mode	13
	When Adjustment is Required in the Service Mode	13
CIRCUIT ADJUSTMENTS		
	DS Board Adjustments	15
	VC Board Adjustment	16

SET-UP ADJUSTMENTS

ADJUSTMENT ITEM AND PROCEDURE	EQUIPMENT AND SIGNAL	MEASUREMENT POSITION	ADJUSTMENT LOCATION	ILLUSTRATION AND SHAPE AND NUMBER
• Carry out the following adjustments when readjustment is required or when attaching a new picture tube. • These adjustments should be carried out at rated power supply voltage unless otherwise specified. Controls and switches should be set in standard position as listed below unless otherwise specified. Contrast·····Standard Brightness·····Standard				
BEAM LANDING 1. Face the picture tube screen of the set in an eastward or westward direction to reduce the influence of earth magnetism. 2. Turn the power switch on the set to ON to carry out demagnetizing.	Degausser			
(1) Adjustment of the Y separation axis correction magnet. 1. Receive the image of the crosshatch. 2. Adjust the picture to minimum and the brightness to standard. 3. Secure the neck assembly to the position shown in the figure. (Fig. 1) 4. Move the DY until it comes in contact with the CRT and set it in a upright position. 5. Open and close the Y separation axis correction magnet on the neck assembly until there is up-down symmetry and adjust so that the upper and lower pins are symmetrical. 6. Return the DY to the original position.	Crosshatch Signal		Neck Ass'y Deflection yoke Y separation axis magnet	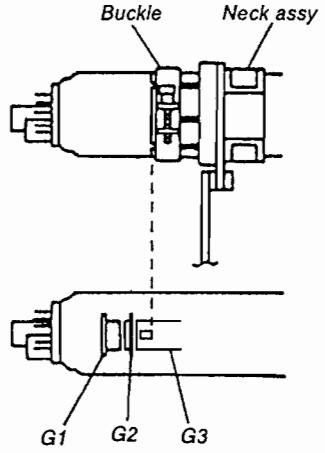

ADJUSTMENT ITEM AND PROCEDURE	EQUIPMENT AND SIGNAL	MEASUREMENT POSITION	ADJUSTMENT LOCATION	ILLUSTRATION AND SHAPE AND NUMBER
(2) Landing 1. Receive the signal of the pattern generator, adjusting the picture to control and the brightness to a level that is easy to view. 2. Carry out rough adjustment of the focus and horizontal convergence. 3. Loosen the retention device on the deflection yoke and adjust the purity adjustment knob. (Fig. 2) 4. Switch the pattern generator to the single color green. 5. Slide the deflection yoke to the back so that the center of the screen is green and use the purity magnet to achieve left-right symmetry. (Fig. 3) 6. Slide the deflection yoke to the front so that the entire screen is the single color green. 7. Switch the pattern generator to the single colors red and blue and confirm that landing has been obtained. 8. Secure the retention device once the deflection yoke position has been determined. 9. If landing has not been obtained in the corner section, use the magnet to make corrections. (Fig. 4)	All-white Signal Single Color Green Signal		PIC...minimum Deflection Yoke Purity Magnet ...center Magnet of Correction	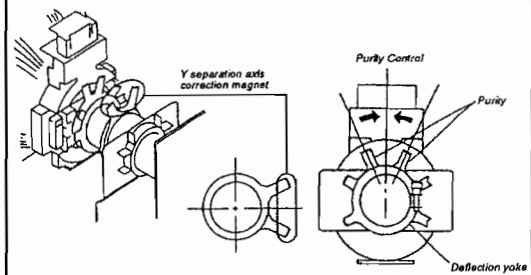 Fig. 2 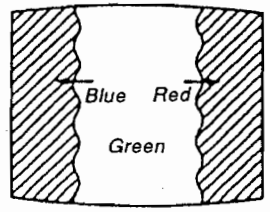 Fig. 3 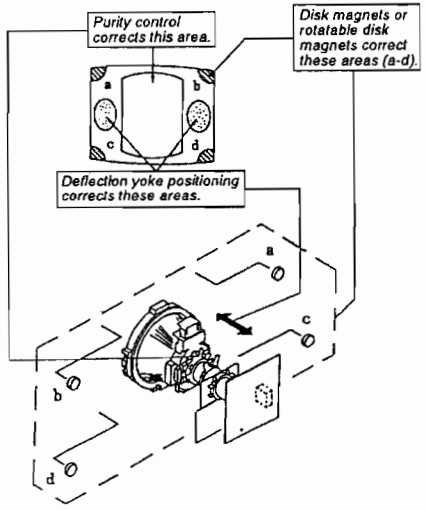 Fig. 4

ADJUSTMENT ITEM AND PROCEDURE	EQUIPMENT AND SIGNAL	MEASUREMENT POSITION	ADJUSTMENT LOCATION	ILLUSTRATION AND SHAPE AND NUMBER
CONVERGENCE ADJUSTMENT **(1) Screen Center Convergence Adjustment (Static Convergence)** 1. Receive the signal and adjust the picture. 2. Use the horizontal static convergence knob to arrange the red, green and blue dots on top of each other in a horizontal direction in screen center. 3. Use the vertical static convergence magnet to arrange the red, green and blue dots on top of each other in a vertical direction in screen center. ※ If the dots do not become arranged in a horizontal direction within the adjustment range for the horizontal static convergence knob, simultaneously use the vertical static convergence magnet to adjust white taking tracking. (Fig. 6) (Incline the vertical static convergence and adjust by opening and closing the knob.)	Dot Signal		PIC...standard RV701 (H. STAT) V. STAT Magnet	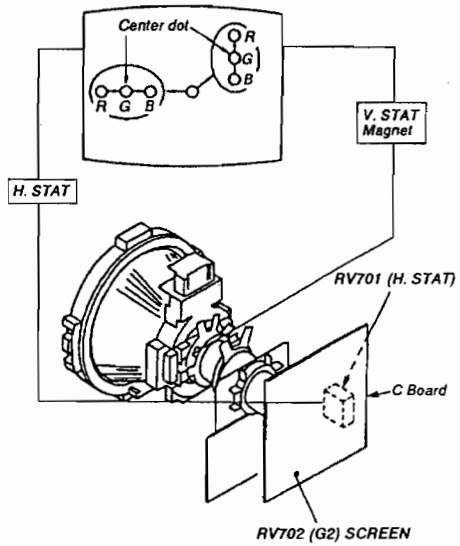 Fig. 5 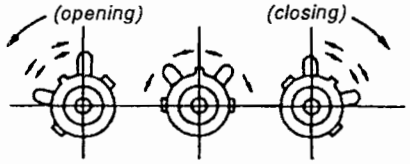 Fig. 6

ADJUSTMENT ITEM AND PROCEDURE	EQUIPMENT AND SIGNAL	MEASUREMENT POSITION	ADJUSTMENT LOCATION	ILLUSTRATION AND SHAPE AND NUMBER
4. Movement of the red, green and blue dots by inclination and opening/closing of the vertical static convergence magnet. (1) Movement when opening and closing the vertical static convergence magnet.			V. STAT Magnet	(1) 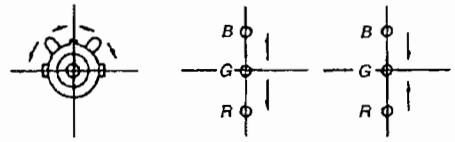 Fig. 7
(2) Movement when inclining the vertical static convergence magnet in a counter-clockwise direction.				(2) 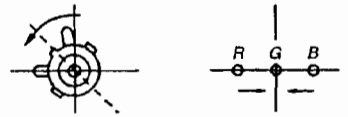 Fig. 8
(3) Movement when inclining the vertical static convergence magnet in a clockwise direction.				(3) 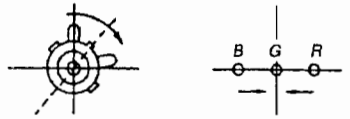 Fig. 9
(4) Movement when inclining the vertical static convergence magnet and opening and closing. ※ If the blue dots do not line up in relation to the red and green dots, correct with the BMC (6-pole) magnet.				(4) 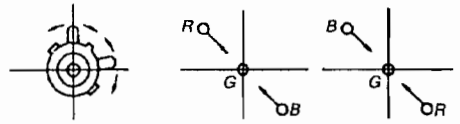 Fig. 10

ADJUSTMENT ITEM AND PROCEDURE	EQUIPMENT AND SIGNAL	MEASUREMENT POSITION	ADJUSTMENT LOCATION	ILLUSTRATION AND SHAPE AND NUMBER
5. Correction of HMC (horizontal misconvergence) and VMC (vertical misconvergence) with the BMC (6-pole) magnet. (1) HMC correction with the BMC (6-pole) magnet and movement of the electron beam. (Fig. 11) (2) VMC correction with the BMC (6-pole) magnet and movement of the electron beam. (Fig. 12)			BMC Magnet	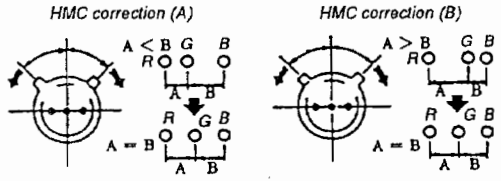 Fig. 11 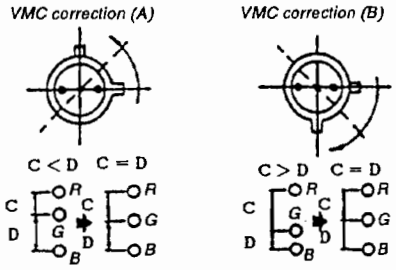 Fig. 12 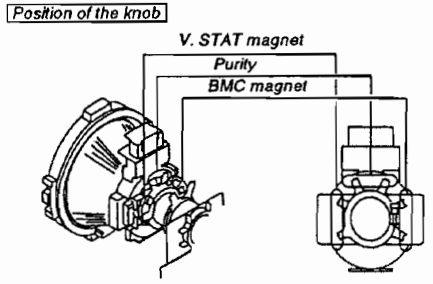 Fig. 13

ADJUSTMENT ITEM AND PROCEDURE	EQUIPMENT AND SIGNAL	MEASUREMENT POSITION	ADJUSTMENT LOCATION	ILLUSTRATION AND SHAPE AND NUMBER
(2) Convergence Adjustment on the Screen Periphery (Dynamic Convergence) 1. Use the horizontal static convergence VR (H. STAT) to adjust the convergence in a horizontal direction in screen center. 2. Change to the service mode and carry out the following dynamic convergence adjustments. (Service Mode : Use the remote control to press the following buttons in succession : [Screen display] ➡ [CH5] ➡ [Volume +] ➡ [Power]. Please refer to page 14 for selecting the item on how to adjust the dynamic convergence.) 3. Press [1] and [4] on the remote control to select the items. Adjust with the [3] and [6] buttons. (1) Y. BOW adjustment on the upper side of the screen (UP. Y. BOW). (2) Y. BOW adjustment on the lower side of the screen (LO. Y. BOW).			RV701 (H. STAT)	

	Adjustment Items	Adjustment Range
01	DC SHIFT (H. STAT)	000-063
02	H. AMP	000-063
03	H. TILT	000-063
04	UP. Y. BOW	000-063
05	UP. C. BOW	000-063
06	UP. TILT	000-063
07	LO. Y. BOW	000-063
08	LO. C. BOW	000-063
09	LO. TILT	000-063

(1)

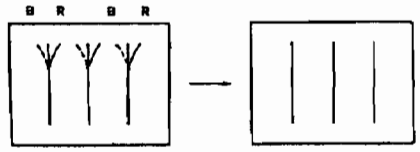

(2)

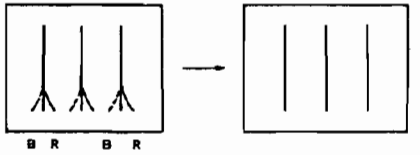

ADJUSTMENT ITEM AND PROCEDURE	EQUIPMENT AND SIGNAL	MEASUREMENT POSITION	ADJUSTMENT LOCATION	ILLUSTRATION AND SHAPE AND NUMBER
(3) H. AMP adjustment (H. AMP) (4) TILT adjustment (H. TILT) (5) C. BOW adjustment on the upper side of the screen (UP. C. BOW). (6) TILT adjustment on the upper side of the screen (UP.TILT). (7) C. BOW adjustment on the lower side of the screen (LO. C. BOW).				(3) 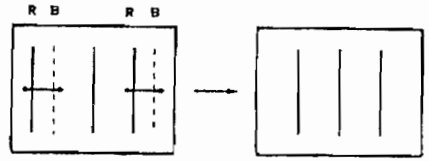 (4) 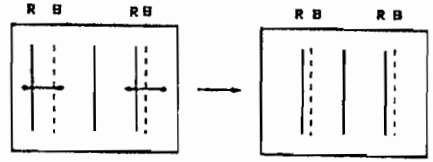 (5) 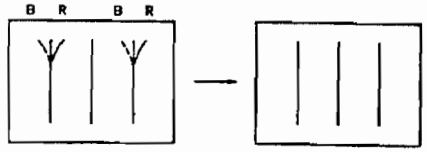 (6) 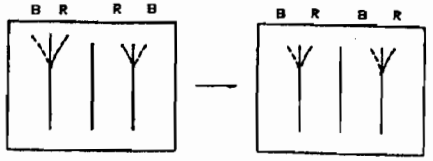 (7) 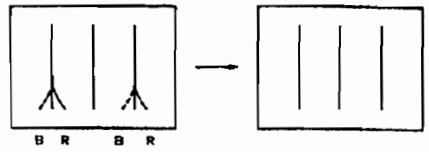

ADJUSTMENT ITEM AND PROCEDURE	EQUIPMENT AND SIGNAL	MEASUREMENT POSITION	ADJUSTMENT LOCATION	ILLUSTRATION AND SHAPE AND NUMBER
(8) TILT adjustment on the lower side of the screen (LO. TILT). 4. If there is a misconvergence in the corner section of the screen, use permalloy to adjust.			Permalloy Ass'y	(8) 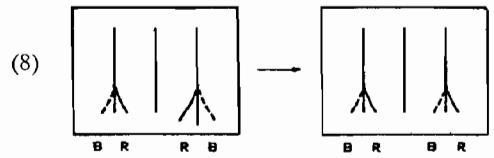 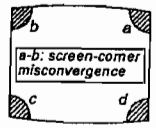 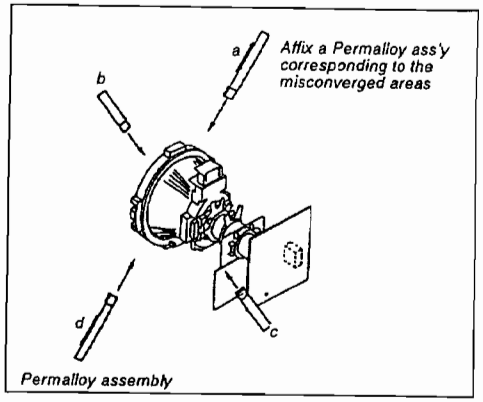

ADJUSTMENT ITEM AND PROCEDURE	EQUIPMENT AND SIGNAL	MEASUREMENT POSITION	ADJUSTMENT LOCATION	ILLUSTRATION AND SHAPE AND NUMBER
FOCUS ADJUSTMENT 1. Receive the signal. 2. Adjust the picture to standard condition. 3. Adjust the focus volume of the flyback transformer until the focus is ideal in the center of the screen. 4. Obtain screen left-right focus balance with VR on the board. 5. If the focus is adjusted only to the center of the screen, a magneta ring will appear on the screen. In such a case adjust the focus so that is even on all parts of the screen.	VGA480 RGB Signal	D BOARD	Focus Volume (FBT) RV1701 (D Board)	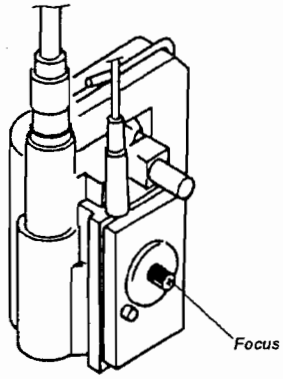
SCREEN (G2) WHITE BALANCE ADJUSTMENT **G2 Adjustment (RV702)** 1. Adjust the picture and brightness to control. 2. Connect an oscilloscope to the cathode. 3. Remove connect pin to an external power supply and adjust the cathode voltage. 4. Adjust (G2) by adjusting to a position that is just prior to disappearance of the flyback line on the screen.	Oscilloscope	CN305 Pin ①, ②, ③	PIC...standand BRT...standard RV702 (C Board)	145 ± 2VDC
WHITE BALANCE ADJUSTMENT (Caution ; Refer to Page 14) 1. Input the RGB gray scale and select 9300K on the screen menu. 2. Set so that the user control contrast is minimum and the brightness is reset. 3. Set in the service mode and adjust so that the 0 IRE of the gray scale is cut off and 5 IRE is slightly bright at a brightness of 01.	VGA480 RGB Gray Scale			0 IRE ·····Cut Off 5 IRE ·····01

ADJUSTMENT ITEM AND PROCEDURE	EQUIPMENT AND SIGNAL	MEASUREMENT POSITION	ADJUSTMENT LOCATION	ILLUSTRATION AND SHAPE AND NUMBER
4. Change the signal and change the signal level so that the center brightness is 10 nit.	All-white signal			Center brightness·····10nit
Note : If fine adjustments of the brightness are not possible with the signal level, use contrast on the user control to adjust.				
5. Use the G cutoff and B cutoff to adjust so that the color temperature.			G Cutoff B Cutoff	9300K+8 MPCD ± 2JND All-White Signal Level·····100 IRE
6. Set the signal level to 100 IRE.	All-white signal		G Drive	9300K+8 MPCD ± 2JND
7. Use the G drive and B drive to adjust so that the color temperature.			B Drive	
8. Adjust the brightness to 10 nit and confirm that the color temperature. Repeat steps 3 to 7 to adjust when necessary.				
9. Return to step 1 and check whether the brightness has altered. If so, repeat steps 1-8 to adjust.				
10. Save the adjustment data.				
11. Change the signal to the gray scale and go to the 6500K mode on the screen menu.				
12. Carry out the same adjustments as in steps 2 to 8 so that the color temperature.				6500K+8 MPCD ± 2JND
13. Save the adjustment data.				

ELECTRIC ADJUSTMENT IN THE SERVICE MODE

Electric adjustment can be carried out with the remote commander provided with the set (RM-854).
The places to be adjusted in the service mode are as follows.

RESET U MEN ---------- All user controls shall be preset.
GEO DEST ---------- Adjustment of screen distortion.
D CONV ---------- Convergence adjustment.
W BALANCE ---------- White balance adjustment.

When entering the service mode, the set shall be in standby condition, and each switch shall be pressed in the order of 「Screen display → 5 → VOL+ → POWER」.

FUNCTION OF THE COMMANDER IN THE SERVICE MODE

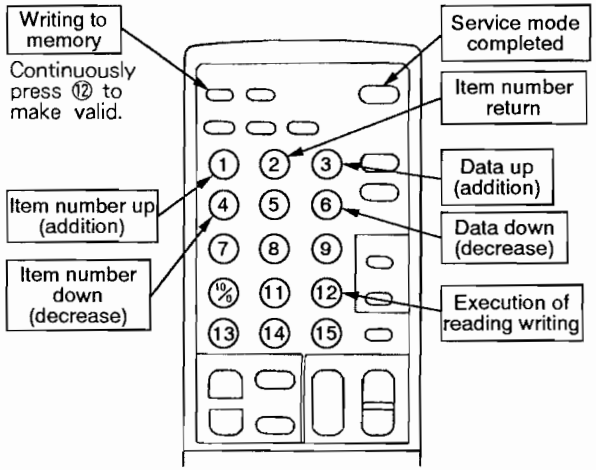

• WHEN ADJUSTMENT IS REQUIRED IN THE SERVICE MODE

When carrying out the following repairs, please be aware that adjustment in the service mode is required.

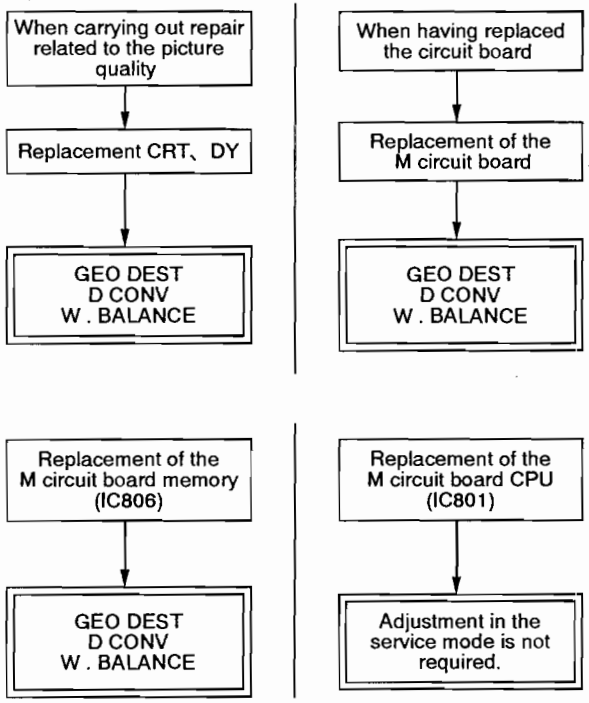

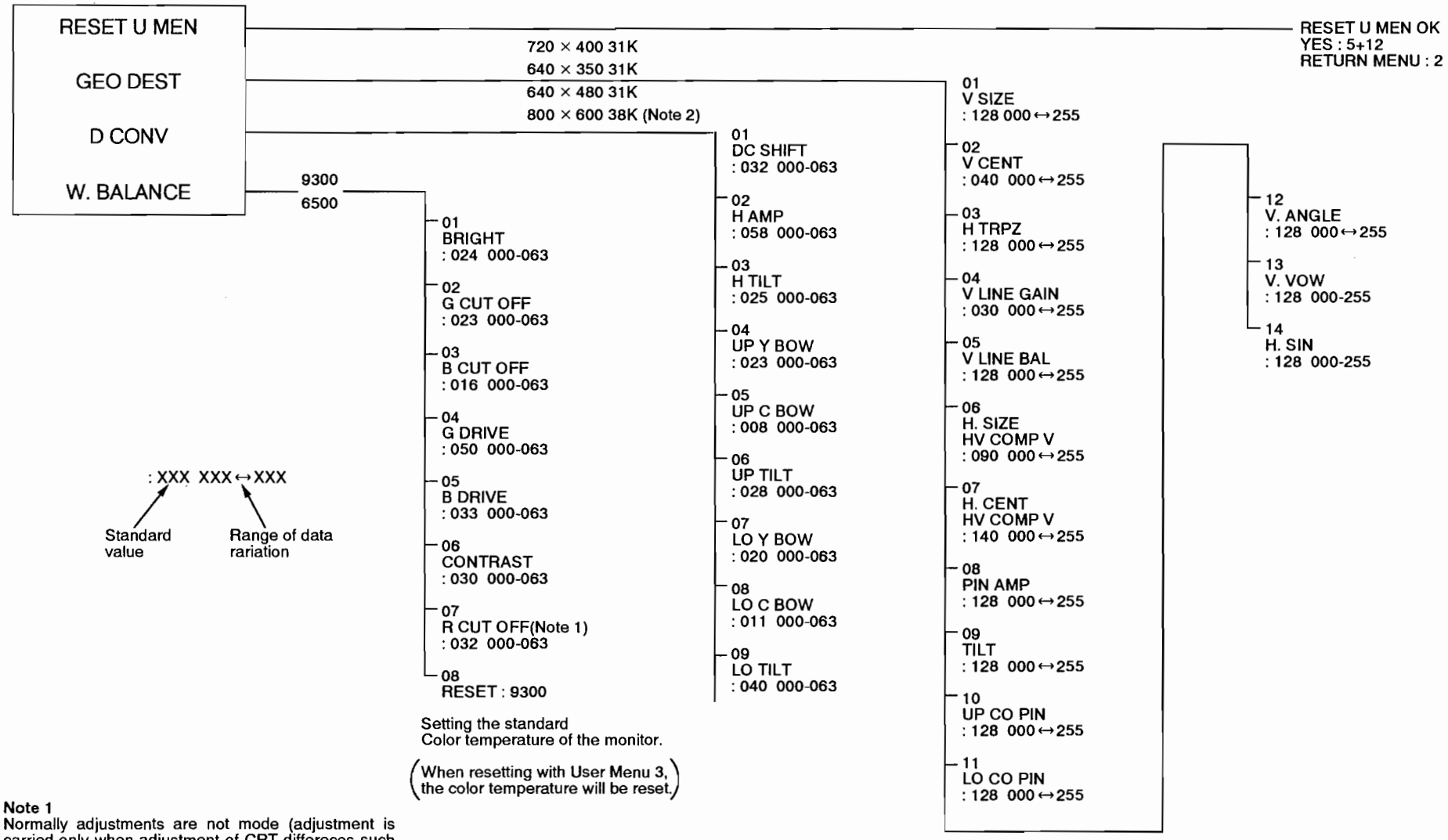

Note 1
Normally adjustments are not mode (adjustment is carried only when adjustment of CRT differeces such as G cut-off and B cut -off cannot be mode).
When making this adjustment, all WB will have to be carried out from the beginning.

Note 2
The 800 × 600 mode does not support PGM-2950/2950E.
Consequently, there is no need for adjustment.

CIRCUIT ADJUSTMENTS

ADJUSTMENT ITEM AND PROCEDURE	EQUIPMENT AND SIGNAL	MEASUREMENT POSITION	ADJUSTMENT LOCATION	ILLUSTRATION AND SHAPE AND NUMBER
DS BOARD ADJUSTMENT				
1. Hfo adjustment	RGB Color bars			Shont the circuit...IC1601 Pin ① and Pin ⑭
1-1. Input color bars.				
1-2. Short the jumper from circuit.	Frequency counter		RV1602	
1-3. Connect the frequency counter to IC Pin.		IC1601 ④ Pin		31469 ± 50Hz
1-4. Adjust VR so that the frequency.				
1-5. Remove the jumper from circuit.				IC1601 Pin ① and pin ⑭
2. V Oscillator adjustment				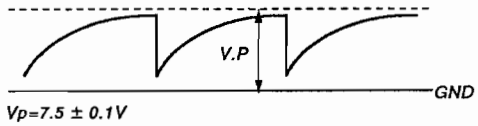
2-1. Connect the oscilloscope to IC Pin and adjust VR so that the waveform is as shown in the figure below.	Oscilloscope	IC1601 ⑱ Pin	RV1601	**DS BOARD** – COMPONENT SIDE – 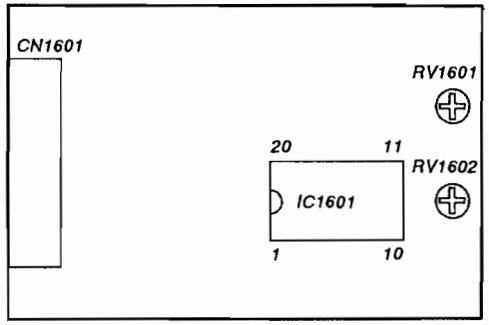

ADJUSTMENT ITEM AND PROCEDURE	EQUIPMENT AND SIGNAL	MEASUREMENT POSITION	ADJUSTMENT LOCATION	ILLUSTRATION AND SHAPE AND NUMBER
VC BOARD ADJUSTMENT 1. Connect the digital multimeter to Trance. 2. Adjustment with VR so that the reading of the voltmeter becomes maximum control.		T1801 ⑩ pin	RV1801	**VC BOARD** – COMPONENT SIDE – 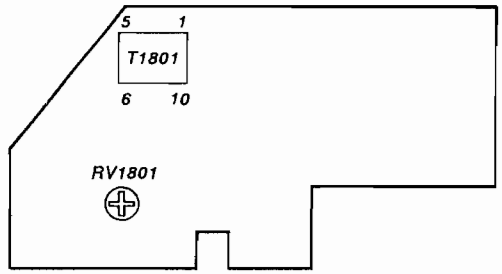

(Notes)

Example 1 :

Due to variations in the characteristics of the R CUT OFF, these characteristics have to be adjusted only in cases in which the white balance cannot be adjusted, but normally they are not adjusted. As there is only one data memory each for all conditions, the black level of the red color for all signals and color temperatures (the white balance of the black side) change when changing this data.

9-978-474-01

Sony Corporation
Consumer A&V Products Company
TV & Display Products Div.

English
95BL02138-1
Printed in Japan
©1995.2